SuperQuilt

Multi-layer Insulation Blanket for Roofs, Walls & Floors

Thermal Insulation in a 40mm thin, flexible, multi-layer membrane

Thermally the best performing multi-foil on the market by far.

registered LABC

BDA KEUR

kiwa

Warrington Fire research

Scottish Type Approval Scheme

YBS Insulation

HIGH QUALITY PRODUCTS FOR THE BUILDING INDUSTRY

YBS Insulation

HIGH QUALITY PRODUCTS FOR THE BUILDING INDUSTRY

contents.


YBS Insulation
HIGH QUALITY PRODUCTS FOR THE BUILDING INDUSTRY

Thermally the best performing multi-foil on the market by far.

Unique Technology

Our unique patented technology allows the material to expand where necesary, increasing overall thermal performance.

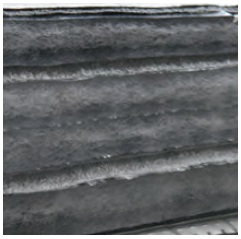

19 Layers

19 layers of material including Reflective Foil, Expanded Polyethylene & Polyester Wadding.

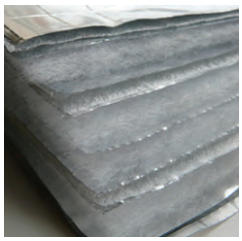

Thermally the best performing

Thermally the best performing multi-foil on the market by far.

SuperQuilt is Equivalent to 200mm of Glass Wool in a two layer Roof Application

Roof Application
(See page 9)

Wall Application
(See Page 23)

Floor Application
(See Page 31)

Building Regulations

Insulation has to comply to the relevant building regulations both when installed during construction or when fitted retrospectively.

Loft Insulation

The installation of insulation in your loft must meet the minimum energy efficiency values set out in the Approved Documents.

However, if such an upgrade is not technically or functionally feasible, the element should be upgraded to the best standard which can be achieved within a simple payback of no greater than 15 years.

If you are installing loft insulation as part of a roof renovation project, where more than 25 per cent of the roof is being renewed, then the level of insulation should meet the standards required by building regulations Approved Documents. Care should be taken not to block any ventilation at the edges (eaves).

Cavity Wall

The installation of cavity wall insulation is specifically defined as notifiable building work in the Building Regulations. This means that for all buildings which are not exempted from the Regulations, it will be necessary to submit a building notice to a building control body stating that cavity wall insulation work will be carried out. Most local authorities do not levy a building control charge in respect of such building notices. If the installer is registered with The Cavity Insulation Guarantee Agency the installer will in most cases submit the building notice. In any case building owners should always check that a building notice will be submitted.

The Building Regulations require that the insulation material used is suitable for the wall construction concerned. In the case of some foam cavity wall insulating materials an assessment of the risk of the emission of formaldehyde gas will need to be carried out.

Solid Wall

Where a solid wall upgraded by the installation of insulation then it must meet the minimum energy efficiency values set out in the Approved Documents.

Where 25 per cent or more of an external wall is being renovated building regulations would normally apply, and the thermal insulation of the wall would have to meet the standards required by building regulations Approved Documents. In this context renovation means the provision of a new layer or the replacement of an existing layer, but excludes decorative finishes.

Floor Insulation

The installation of insulation in your floor must meet the minimum energy efficiency values set out in the Approved Documents.

However, if such an upgrade is not technically or functionally feasible, the element should be upgraded to the best standard which can be achieved within a simple payback of no greater than 15 years.

Renovation of more than 25 per cent of a solid or suspended floor involving the replacement of screed or a timber floor deck would have to meet the standards required by the building regulations Approved Documents.

L1A L1B

Building Regulations 2010 - APPROVED DOCUMENTS

What you need to achieve:

New Dwelling	U-Value
Roof	0.15 W/m²K
Wall	0.25 W/m²K
Floor	0.20 W/m²K

Existing Dwelling	U-Value
Pitched Roof - insulation at ceiling level	0.16 W/m²K
Pitched Roof - insulation at rafter level	0.18 W/m²K
Flat Roof or roof with intergral insulation	0.18 W/m²K
Wall	0.28 W/m²K
Floor	0.22 W/m²K

For more technical information and U-Value calculations based on your individual construction please contact our technical team.

Email: **technical@ybsinsulation.com**

Telephone: **0871 917 0044**

Help us to help you

Our technical team can carry out a U Value calculation based on your individual construction and requirements. To effectively to this, please provide an exact build up from external to internal by fax or email and they will get back to you.

Roof Applications.

Insulation for use in Roofs

Benefits

- **NHBC Acceptance**
- **Meets requirements of L1A and L1B 2010 addition**
- **In accordance with BR443**
- **Fully certificated**
- **Thermally tested in accordance with EN16012**
- **High thermal resistance of 2.50m²K/W**
- **Effective solar over-heating barrier**
- **Effective in summer and winter**
- **Lightweight, thin & flexible**
- **Fast and simple installation**
- **Tear Resistant**
- **For pitched roofs between 20° and 70°**

SuperQuilt is a very flexible, easy to fit, multilayer insulation thermally tested in accordance with EN16012 achieving a high thermal resistance of 2.50m²K/W for SuperQuilt accompanied by a 25mm air cavity either side of the material.

How does SuperQuilt Work?

Due to the special composition of multi-layers of insulation, SuperQuilt effectively deals with all forms of energy transfer (i.e. conduction, convection and radiation). SuperQuilt works most effectively by reflecting infra-red radiation. This means that not only is SuperQuilt effective in winter by reflecting heat back into the building and cold out, but also in summer, SuperQuilt is a very effective barrier to solar overheating which reduces the need for artificial cooling systems as it prevents the accumulation of heat within the building.

General Fixing Instructions

Installation of SuperQuilt for pitched roof applications and additional insulation products should be in accordance with the manufacturers certificate, fixing instructions and current good building practice.

SuperQuilt must be installed with a 50mm overlap with all joints taped with YBS 75mm foil tape.

SuperQuilt can be cut with a YBS SuperQuilt cutter, craft knife or a sharp pair of scissors.

SuperQuilt can be easily fixed with staples at regular intervals. Minimum 14mm stainless steel or galvanised staples are recommended.

SuperQuilt is most effective with a minimum 25mm air gap on either side. Battens can be used to create this gap.

No protective clothing/handling required.

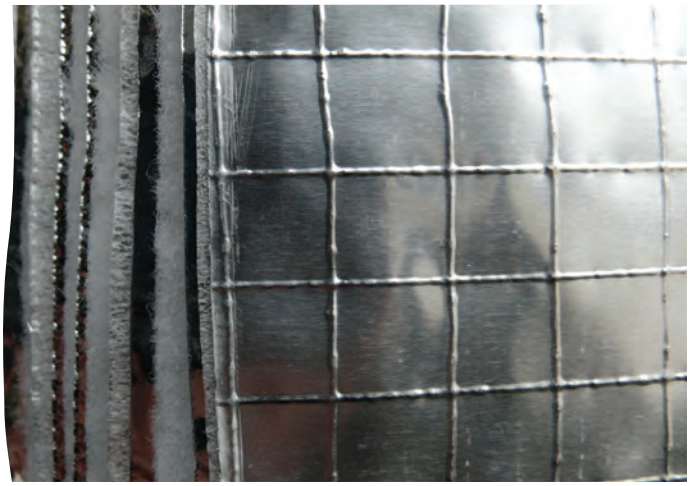

Under Rafter Pitch Roof

Fixing Instructions

Installation of SuperQuilt for under rafter applications and additional insulation products should be in accordance with the manufacturers certificate, fixing instructions and current good building practice.

SuperQuilt is applied directly from the roll either vertically or horizontally depending on the rafter height, pulled tight and stapled onto the rafters at minimum 300mm centres.

SuperQuilt should be overlapped at each joint by approx. 50mm and stapled onto the rafters, the joints should be sealed using YBS Foil Tape. Additionally, at the eaves SuperQuilt is cut around the rafters and sealed to the Cavity wall insulation or wall plate.

Fix 25mm by 38mm battens at right angel to rafters. Battens must always be fixed around the perimeter of windows.

The plasterboard is fixed over the SuperQuilt and onto the battens in the usual manner.

When installed below rafters SuperQuilt will perform as a vapour barrier.

See installation video at www.ybsinsulation.com

U-Value Combined Method (W/m²K)			0.18
	Thickness (mm)	Conductivity (W/mK)	Resistance (m²K/W)
Outside Surface	-	-	0.040
Slate/Tile	10.00	-	-
Batten Cavity	25.00	-	-
Breather Membrane	-	-	-
Rafter Cavity	30.00	-	0.340
PIR	70.00	0.022	3.182
Rafter Cavity	25.00	-	0.490
SuperQuilt	14.00	-	1.520
Batten Cavity	25.00	-	0.490
Plasterboard	12.50	0.190	0.066
Inside Surface	-	-	0.100
Total Resistance			6.292

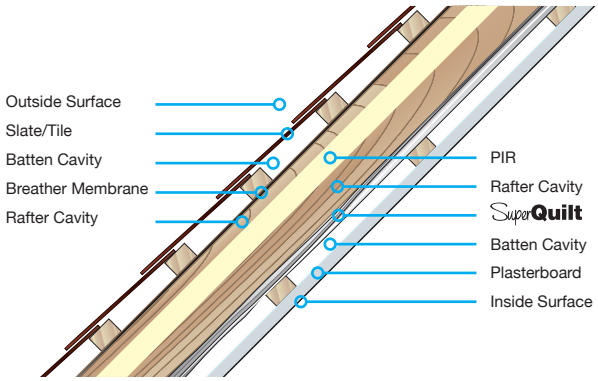

U-Value table

All calculations are based on 50mm rafters and include the effect of cold bridging. For individual calculation please contact the technical team on 0871 917 0044

Description (rafters at 400mm centres)	U-Value
SuperQuilt and 75mm PIR (0.022 W/mk)	0.18 W/m²k
SuperQuilt and 130mm Glasswool (0.040 W/mK)	0.18 W/m²k
SuperQuilt and 110mm PIR (0.022 W/mk)	0.15 W/m²k
SuperQuilt and 180mm Glasswool (0.040 W/mK)	0.15 W/m²k
Description (rafters at 600mm centres)	**U-Value**
SuperQuilt and 70mm PIR (0.022 W/mk)	0.18 W/m²k
SuperQuilt and 120mm Glasswool (0.040 W/mK)	0.18 W/m²k
SuperQuilt and 95mm PIR (0.022 W/mk)	0.15 W/m²k
SuperQuilt and 165mm Glasswool (0.040 W/mK)	0.15 W/m²k

Over Rafter Pitch Roof

Fixing Instructions

Installation of SuperQuilt for over rafter applications and additional insulation products should be in accordance with the manufacturers certificate, fixing instructions and current good building practice.

SuperQuilt is applied directly from the roll either vertically or horizontally depending on the rafter height, pulled tight and stapled onto the rafters at minimum 300mm centres.

SuperQuilt should be overlapped at each joint by approx. 50mm and stapled onto the rafters, the joints should be sealed using YBS Foil Tape. Additionally, at the eaves SuperQuilt is cut around the rafters and sealed to the Cavity wall insulation or wall plate.

Parallel battens, recommended 38mm by 50mm are fixed to the rafters. Battens must always be fixed around the perimeter of windows.

A breather membrane is fitted in accordance with the manufacturers fixing details above the battens before tile battens and tiles. A vapour control layer should be fitted behind plasterboard to prevent any risk of interstitial condensation.

U-Value Combined Method (W/m²K)			0.18
	Thickness (mm)	Conductivity (W/mK)	Resistance (m²K/W)
Outside Surface	-	-	0.040
Slate/Tile	10.00	-	-
Batten Cavity	25.00	-	-
Breather Membrane	-	-	-
Batten Cavity	38.00	-	0.490
SuperQuilt	14.00	-	1.520
Rafter Cavity	25.00	-	0.490
PIR	70.00	0.022	3.182
Rafter Cavity	40.00	-	0.340
Vapour Control	-	-	-
Plasterboard	12.50	0.190	0.066
Inside Surface	-	-	0.100
Total Resistance			6.292

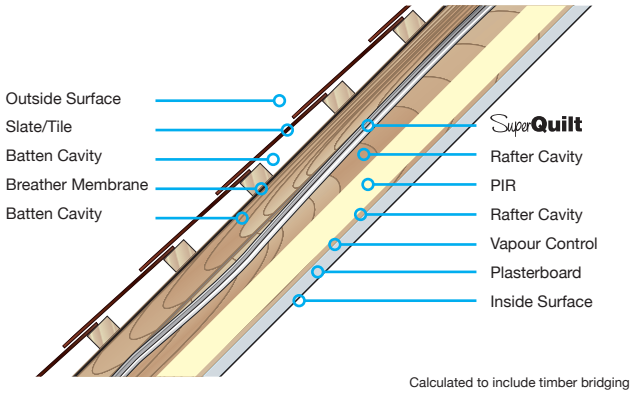

Calculated to include timber bridging

U-Value table

All calculations are based on 50mm rafters and include the effect of cold bridging. For individual calculation please contact the technical team on 0871 917 0044

Description (rafters at 400mm centres)	U-Value
SuperQuilt and 80mm PIR (0.022 W/mk)	0.18 W/m²k
SuperQuilt and 135mm Glasswool (0.040 W/mK)	0.18 W/m²k
SuperQuilt and 115mm PIR (0.022 W/mk)	0.15 W/m²k
SuperQuilt and 185mm Glasswool (0.040 W/mK)	0.15 W/m²k
Description (rafters at 600mm centres)	**U-Value**
SuperQuilt and 70mm PIR (0.022 W/mk)	0.18 W/m²k
SuperQuilt and 125mm Glasswool (0.040 W/mK)	0.18 W/m²k
SuperQuilt and 100mm PIR (0.022 W/mk)	0.15 W/m²k
SuperQuilt and 170mm Glasswool (0.040 W/mK)	0.15 W/m²k

Two Layer Pitch Roof

Fixing Instructions

Installation of SuperQuilt for under rafter applications and additional insulation products should be in accordance with the manufacturers certificate, fixing instructions and current good building practice.

For recessed installation please see page 6.

For under rafter installation please see page 3 fixing instructions.

When installing two layers of SuperQuilt a 38mm air space should be maintained between layers at all times.

U-Value Combined Method (W/m²K)			0.18
	Thickness (mm)	Conductivity (W/mK)	Resistance (m²K/W)
Outside Surface	-	-	0.040
Slate/Tile	10.00	-	-
Batten Cavity	25.00	-	-
Roofing Membrane	-	-	-
Rafter Cavity	38.00	-	0.490
SuperQuilt	14.00	-	1.520
Rafter Cavity	38.00	-	0.490
SuperQuilt	14.00	-	1.520
Batten Cavity	25.00	-	0.490
Insulated Plasterboard	27.00	-	0.630
Inside Surface	-	-	0.100
Total Resistance			5.784

See installation video at www.ybsinsulation.com

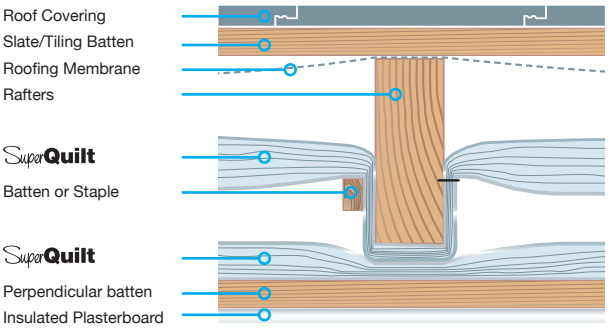

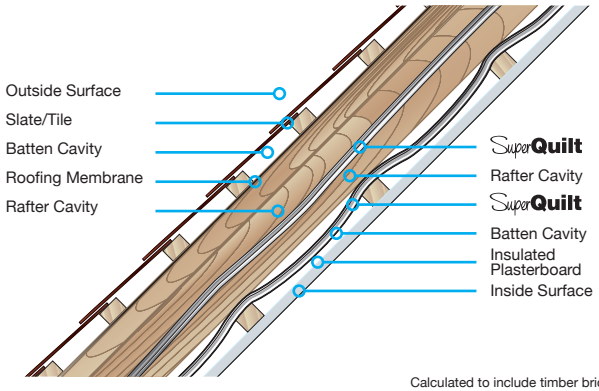

Calculated to include timber bridging

U-Value table

All calculations are based on 50mm rafters and include the effect of cold bridging. For individual calculation please contact the technical team on 0871 917 0044

Description (rafters at 400mm centres)	U-Value
SuperQuilt (2 Layers) with 40mm insulated Plasterboard (XPS) (1.070 m²K/W)	0.18 W/m²k
SuperQuilt (2 Layers) and 50mm PIR (0.022 W/mK)	0.15 W/m²k
SuperQuilt (2 Layers) and 85mm Glasswool (0.044 W/mk)	0.15 W/m²k
SuperQuilt (2 Layers) and 57.5mm Insulated Plasterboard (PIR) (2.2 m²K/W)	0.15 W/m²k
Description (rafters at 600mm centres)	**U-Value**
SuperQuilt (2 Layers) with 40mm insulated Plasterboard (XPS) (1.070 m²K/W)	0.18 W/m²k
SuperQuilt (2 Layers) and 45mm PIR (0.022 W/mK)	0.15 W/m²k
SuperQuilt (2 Layers) and 75mm Glasswool (0.044 W/mk)	0.15 W/m²k
SuperQuilt (2 Layers) and 57.5mm Insulated Plasterboard (PIR) (2.2 m²K/W)	0.15 W/m²k

Under Rafter Flat Roof

Fixing Instructions

Installation of SuperQuilt for under rafter flat roof applications and additional insulation products should be in accordance with the manufacturers certificate, fixing instructions and current good building practice.

SuperQuilt should be overlapped at each joint by approx. 50mm and stapled onto the rafters, the joints should be sealed using YBS Foil Tape. When SuperQuilt is cut to fit around openings or connections, gaps must be minimized and any exposed cut edges should be sealed with YBS Foil Tape to prevent condensation.

SuperQuilt should be cut equal to the width if the roof section plus 100mm. Installation should start from the external wall with SuperQuilt being unrolled perpendicular to the rafters, after which it is fixed using staples or nails or with saddle clips.

SuperQuilt should be held in place using timber battens or by other means as shown, in such a way that there is a nominal 25mm air cavity above the product (if applicable) and a nominal 25mm air cavity below. To minimize the effect of thermal bridging cross battening is advised.

When installed below rafters SuperQuilt will perform as a vapour barrier.

U-Value Combined Method (W/m²K)			0.18
	Thickness (mm)	Conductivity (W/mK)	Resistance (m²K/W)
EPDM	-	-	-
Ply decking	-	-	-
Cavity (ventilated)	50.00	-	0.170
PIR	100.00	0.022	4.545
SuperQuilt	14.00	-	1.520
Batten Cavity	25.00	-	0.490
Plasterboard	12.50	0.190	0.066
Inside Surface	-	-	0.100
Total Resistance			6.891

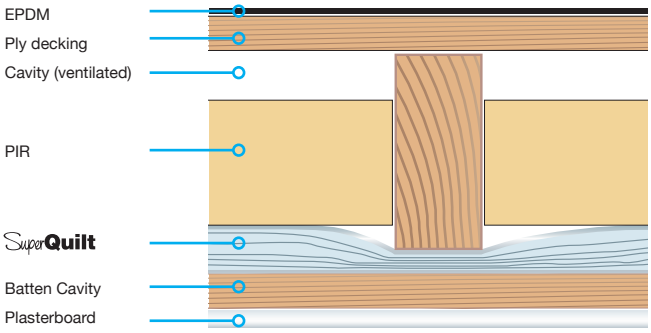

U-Value table

All calculations are based on 50mm rafters and include the effect of cold bridging. For individual calculation please contact the technical team on 0871 917 0044

Description (rafters at 400mm centres)	U-Value
SuperQuilt and 160mm Mineral Wool (0.040 W/mk)	0.18 W/m²k
SuperQuilt and 210mm Mineral Wool (0.040 W/mk)	0.15 W/m²k
SuperQuilt and 140mm Mineral Wool (0.033 W/mk)	0.18 W/m²k
SuperQuilt and 180mm Mineral Wool (0.033 W/mk)	0.15 W/m²k
SuperQuilt and 100mm PIR (0.022 W/mk)	0.18 W/m²k
SuperQuilt and 135mm PIR (0.022 W/mk)	0.15 W/m²k
Description (rafters at 600mm centres)	**U-Value**
SuperQuilt and 150mm Mineral Wool (0.040 W/mk)	0.18 W/m²k
SuperQuilt and 200mm Mineral Wool (0.040 W/mk)	0.15 W/m²k
SuperQuilt and 125mm Mineral Wool (0.033 W/mk)	0.18 W/m²k
SuperQuilt and 170mm Mineral Wool (0.033 W/mk)	0.15 W/m²k
SuperQuilt and 90mm PIR (0.022 W/mk)	0.18 W/m²k
SuperQuilt and 120mm PIR (0.022 W/mk)	0.15 W/m²k

Under Rafter Flat Roof

Fixing Instructions

Installation of SuperQuilt for under rafter flat roof applications and additional insulation products should be in accordance with the manufacturers certificate, fixing instructions and current good building practice.

SuperQuilt should be overlapped at each joint by approx. 50mm and stapled onto the rafters, the joints should be sealed using YBS Foil Tape. When SuperQuilt is cut to fit around openings or connections, gaps must be minimized and any exposed cut edges should be sealed with YBS Foil Tap.condensation.

SuperQuilt should be cut equal to the width if the roof section plus 100mm. Installation should start from the external wall with SuperQuilt being unrolled perpendicular to the rafters, after which it is fixed using staples or nails or with saddle clips.

SuperQuilt should be held in place using timber battens or by other means as shown, in such a way that there is a nominal 25mm air cavity above the product (if applicable) and a nominal 25mm air cavity below. To minimize the effect of thermal bridging cross battening is advised.

When installed below rafters SuperQuilt will perform as a vapour barrier.

U-Value Combined Method (W/m²K)			0.18
	Thickness (mm)	Conductivity (W/mK)	Resistance (m²K/W)
EPDM	-	-	-
Ply decking	-	-	-
Cavity (ventilated)	50.00	-	0.170
PIR	90.00	0.022	4.091
Cavity (non-ventilated)	25.00	-	0.490
SuperQuilt	14.00	-	1.520
Batten Cavity	25.00	-	0.490
Plasterboard	12.50	-	0.066
Inside Surface	-	-	0.100
Total Resistance			6.927

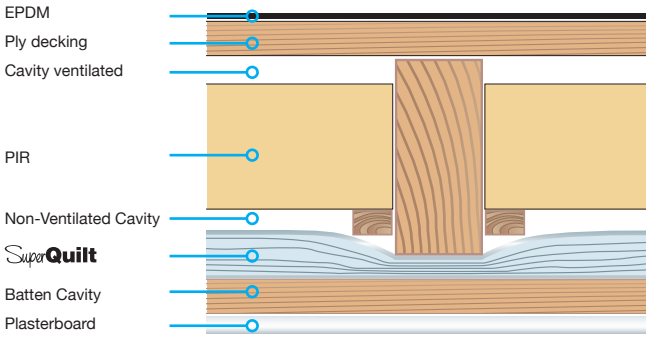

U-Value table

All calculations are based on 50mm rafters and include the effect of cold bridging. For individual calculation please contact the technical team on 0871 917 0044

Description (rafters at 400mm centres)	U-Value
SuperQuilt and 140mm Mineral Wool (0.040 W/mk)	0.18 W/m²k
SuperQuilt and 190mm Mineral Wool (0.040 W/mk)	0.15 W/m²k
SuperQuilt and 120mm Mineral Wool (0.033 W/mk)	0.18 W/m²k
SuperQuilt and 170mm Mineral Wool (0.033 W/mk)	0.15 W/m²k
SuperQuilt and 90mm PIR (0.022 W/mk)	0.18 W/m²k
SuperQuilt and 120mm PIR (0.022 W/mk)	0.15 W/m²k
Description (rafters at 600mm centres)	**U-Value**
SuperQuilt and 130mm Mineral Wool (0.040 W/mk)	0.18 W/m²k
SuperQuilt and 175mm Mineral Wool (0.040 W/mk)	0.15 W/m²k
SuperQuilt and 110mm Mineral Wool (0.033 W/mk)	0.18 W/m²k
SuperQuilt and 150mm Mineral Wool (0.033 W/mk)	0.15 W/m²k
SuperQuilt and 80mm PIR (0.022 W/mk)	0.18 W/m²k
SuperQuilt and 110mm PIR (0.022 W/mk)	0.15 W/m²k

Over Rafter Flat Roof

Fixing Instructions

Installation of SuperQuilt for over rafter flat roof applications and additional insulation products should be in accordance with the manufacturers certificate, fixing instructions and current good building practice.

SuperQuilt should be overlapped at each joint by approx. 50mm and stapled onto the rafters, the joints should be sealed using YBS Foil Tape. When SuperQuilt is cut to fit around openings or connections, gaps must be minimized and any exposed cut edges should be sealed with YBS Foil Tap.condensation.

SuperQuilt should be cut equal to the width if the roof section plus 100mm. Installation should start from the external wall with SuperQuilt being unrolled perpendicular to the rafters, after which it is fixed using staples or nails or with saddle clips.

SuperQuilt should be held in place using timber battens or by other means as shown, in such a way that there is a nominal 25mm air cavity above the product (if applicable) and a nominal 25mm air cavity below. To minimize the effect of thermal bridging cross battening is advised.

When installed below rafters SuperQuilt will perform as a vapour barrier.

U-Value Combined Method (W/m²K)			0.18
	Thickness (mm)	Conductivity (W/mK)	Resistance (m²K/W)
EPDM	-	-	0.040
PIR	65.00	0.022	2.955
Ply decking	18.00	0.130	0.138
Non-Ventilated Cavity	25.00	-	0.490
SuperQuilt	14.00	-	1.520
Non-Ventilated Cavity	75.00	-	0.490
Plasterboard	12.50	0.190	0.066
Inside Surface	-	-	0.100
Total Resistance			5.799

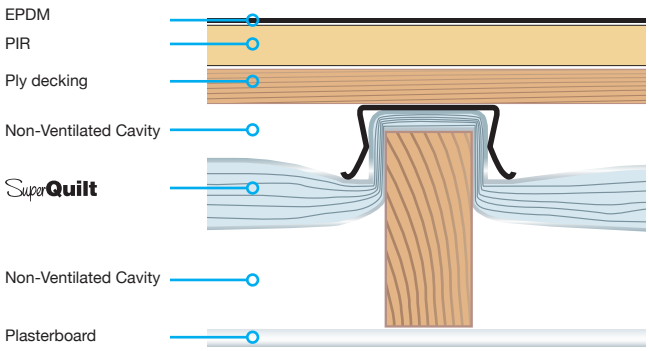

U-Value table

All calculations are based on 50mm rafters and include the effect of cold bridging. For individual calculation please contact the technical team on 0871 917 0044

Description (rafters at 400mm centres)	U-Value
SuperQuilt and 65mm PIR (0.022 W/mk)	0.18 W/m²k
SuperQuilt and 90mm PIR (0.022 W/mk)	0.15 W/m²k
SuperQuilt and 85mm XPS (0.029 W/mk)	0.18 W/m²k
SuperQuilt and 120mm XPS (0.029 W/mk)	0.15 W/m²k
SuperQuilt and 110mm EPS (0.038 W/mk)	0.18 W/m²k
SuperQuilt and 150mm EPS (0.038 W/mk)	0.15 W/m²k
Description (rafters at 600mm centres)	**U-Value**
SuperQuilt and 65mm PIR (0.022 W/mk)	0.18 W/m²k
SuperQuilt and 90mm PIR (0.022 W/mk)	0.15 W/m²k
SuperQuilt and 85mm XPS (0.029 W/mk)	0.18 W/m²k
SuperQuilt and 120mm XPS (0.029 W/mk)	0.15 W/m²k
SuperQuilt and 105mm EPS (0.038 W/mk)	0.18 W/m²k
SuperQuilt and 145mm EPS (0.038 W/mk)	0.15 W/m²k

Two Layer Flat Roof

Fixing Instructions

Installation of SuperQuilt for over and under rafter flat roof applications and additional insulation products should be in accordance with the manufacturers certificate, fixing instructions and current good building practice.

SuperQuilt should be overlapped at each joint by approx. 50mm and stapled onto the rafters, the joints should be sealed using YBS Foil Tape. When SuperQuilt is cut to fit around openings or connections, gaps must be minimized and any exposed cut edges should be sealed with YBS Foil Tap.condensation.

SuperQuilt should be cut equal to the width if the roof section plus 100mm. Installation should start from the external wall with SuperQuilt being unrolled perpendicular to the rafters, after which it is fixed using staples or nails or with saddle clips.

SuperQuilt should be held in place using timber battens or by other means as shown, in such a way that there is a nominal 25mm air cavity above the product (if applicable) and a nominal 25mm air cavity below. To minimize the effect of thermal bridging cross battening is advised.

When installed below rafters SuperQuilt will perform as a vapour barrier.

U-Value Combined Method (W/m²K)			0.18
	Thickness (mm)	Conductivity (W/mK)	Resistance (m²K/W)
EPDM	-	-	0.040
Ply decking	18.00	0.130	0.138
Non-Ventilated Cavity	25.00	-	0.490
SuperQuilt	14.00	-	1.520
Non-Ventilated Cavity	25.00	-	0.490
PIR	25.00	0.022	1.136
SuperQuilt	14.00	-	1.520
Batten Cavity	25.00	-	0.490
Plasterboard	12.50	0.190	0.066
Inside Surface	-	-	0.100
Total Resistance			5.990

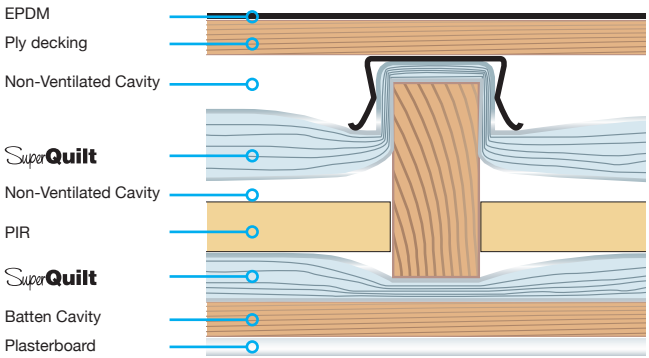

U-Value table

All calculations are based on 50mm rafters and include the effect of cold bridging. For individual calculation please contact the technical team on 0871 917 0044

Description (rafters at 400mm centres)	U-Value
SuperQuilt and 50mm Mineral Wool (0.040 W/mk)	0.18 W/m²k
SuperQuilt and 100mm Mineral Wool (0.040 W/mk)	0.15 W/m²k
SuperQuilt and 40mm Mineral Wool (0.033 W/mk)	0.18 W/m²k
SuperQuilt and 90mm Mineral Wool (0.033 W/mk)	0.15 W/m²k
SuperQuilt and 30mm PIR (0.022 W/mk)	0.18 W/m²k
SuperQuilt and 65mm PIR (0.022 W/mk)	0.15 W/m²k
Description (rafters at 600mm centres)	**U-Value**
SuperQuilt and 50mm Mineral Wool (0.040 W/mk)	0.18 W/m²k
SuperQuilt and 90mm Mineral Wool (0.040 W/mk)	0.15 W/m²k
SuperQuilt and 40mm Mineral Wool (0.033 W/mk)	0.18 W/m²k
SuperQuilt and 80mm Mineral Wool (0.033 W/mk)	0.15 W/m²k
SuperQuilt and 25mm PIR (0.022 W/mk)	0.18 W/m²k
SuperQuilt and 55mm PIR (0.022 W/mk)	0.15 W/m²k

Recessed Detail

Over Rafter Application

Where roof height is critical SuperQuilt can be recessed between the rafters.

1. SuperQuilt is stapled to the top of the first rafter.
2. SuperQuilt is recessed into the rafter void and fixed with staples or with battens.
3. The material is then fixed to opposite rafter as per instruction 2.
4. SuperQuilt is then wrapped around the rafter and the procedure starts again.

Once all the SuperQuilt is fitted, all joints should be taped using YBS Foil Tape.

A breather membrane is then fitted in accordance with the manufacturers fitting instructions.

Tile batten and tiles can then be fitted.

Under Rafter Application

Ensure that there is an airspace above the SuperQuilt at all times.

1. SuperQuilt is stapled to the underside of the first rafter.
2. SuperQuilt is recessed into the rafter void and fixed with staples or with battens.
3. The material is then fixed to opposite rafter as per instruction 2.
4. SuperQuilt is then wrapped around the rafter and the procedure starts again.

Once all the SuperQuilt is fitted, all joints should be taped using YBS Foil tape.

Plasterboard can then be fixed directly to the underside of the rafters below the SuperQuilt.

Over Rafter

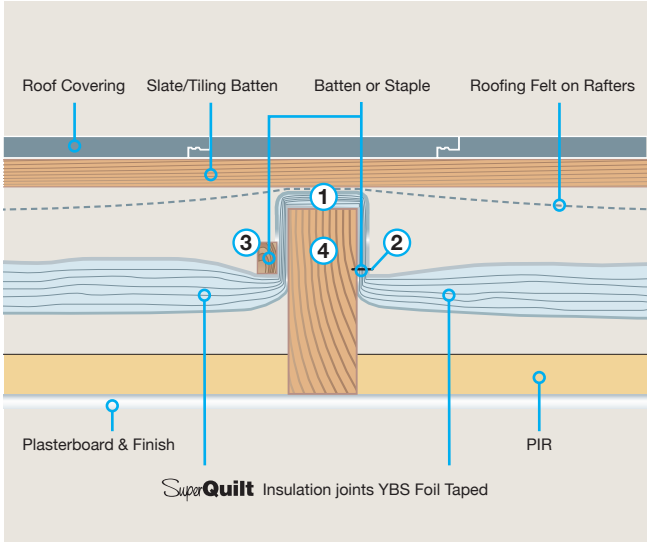

Under Rafter

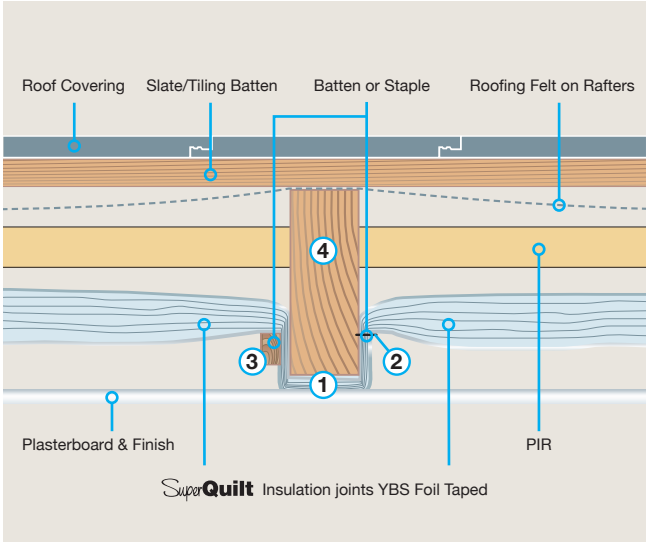

To see an easy way to recess SuperQuilt, please see our installation video (Superquilt Double Layer) at www.ybsinsulation.com

Purlin Details

Between Purlins Application

SuperQuilt is fixed horizontally or vertically and stapled to the underside of the the rafters.

At the purlins the SuperQuilt is turned up and stapled in place.

Perpendicular Battens are fixed through the SuperQuilt into the rafters, at the purlins the battens are fixed into the rafters crushing the SuperQuilt tightly against the purlins.

Plasterboard can then be fixed to the battens.

Around Purlins Application

SuperQuilt is fixed horizontally or vertically and stapled to the underside of the the rafters.

At the purlins the SuperQuilt is cut and pushed behind the purlins then taped to the next piece at the opposite side of the purlin.

Perpendicular Battens are fixed through the SuperQuilt into the rafters.

Plasterboard can then be fixed to the battens.

Between Purlins

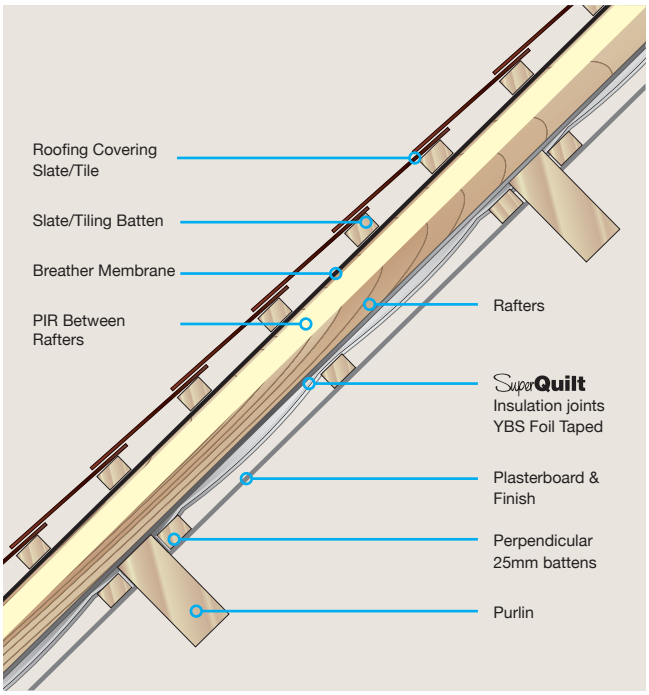

Around Purlins

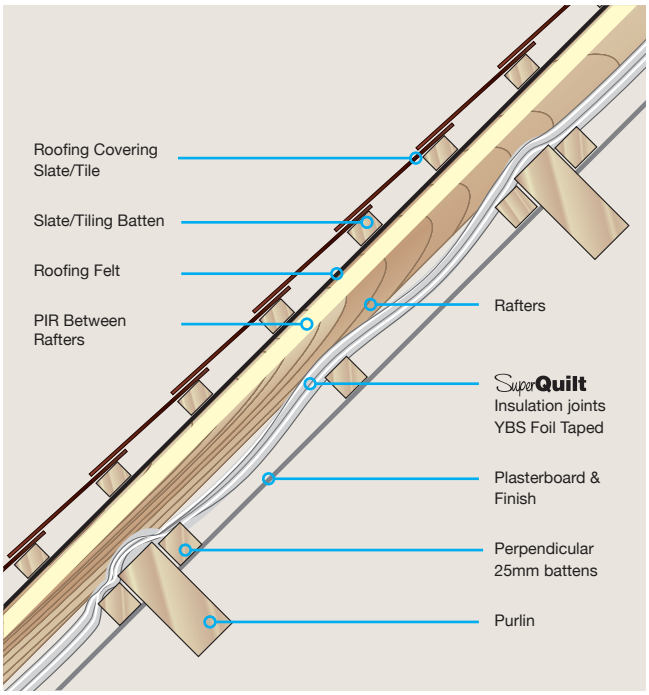

Detailing

Vents / Light Pipes

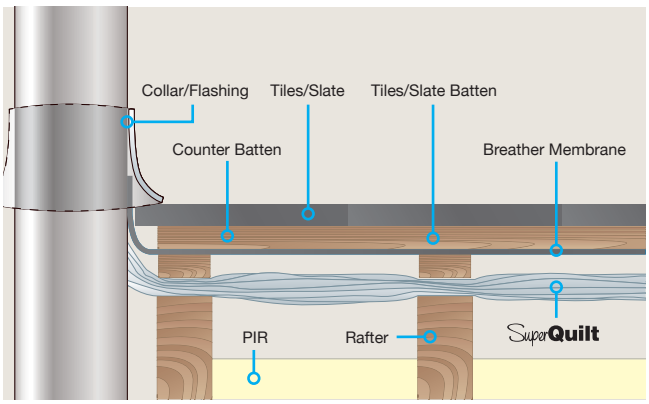

Flashing

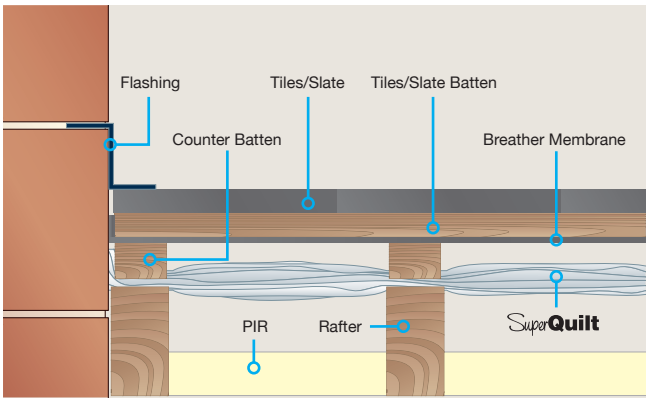

Rooflight

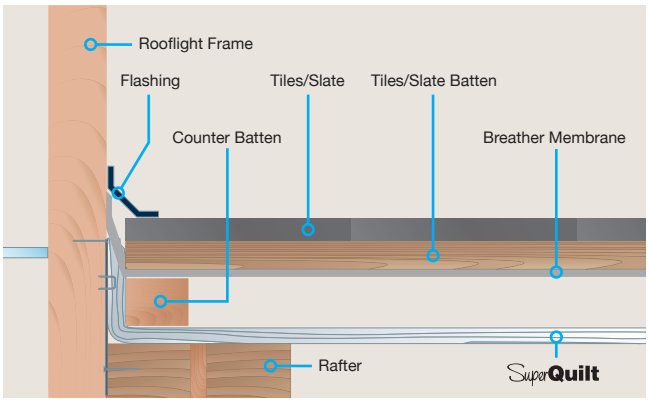

Fixing Instructions

SuperQuilt is fixed above rafters as per fixing details and turned up at the vent/wall/rooflight and sealed with YBS Foil Tape. Battens are placed on the rafters above the Super-Quilt. A breather membrane is fixed above the battens and finished by turning up at the vent/wall/rooflight and sealing to the vent/wall/rooflight. Tile battens are fixed in place. The flashing/collar for the vent/wall/rooflight is fitted above the tile battens and then tiles.

Over Rafter Fixing Details

SuperQuilt is stapled to the rafters. At the eaves the SuperQuilt is cut and taken down between the rafters to the cavity wall insulation or the wall plate. The SuperQuilt needs to be sealed with staples and taped to the rafters and the cavity wall insulation or wall plate to create an airtight envelope.

Under Rafter Fixing Details

SuperQuilt is stapled to the underside of the rafters. At the eaves the SuperQuilt is cut and taken down between the joists to the cavity wall insulation or the wall plate. The material needs to be fixed to the rafters with minimum 14mm staples and taped to the joists and cavity wall insulation or wall plate so that an airtight envelope is created.

Foil taped joins

SuperQuilt should be overlapped at each joint by approx. 50mm and stapled onto the battens, the joints should be sealed using YBS 75mm Foil Tape.

Vapour control layer

When all joints are sealed using foil tape SuperQuilt also works as a vapour control layer.

- SuperQuilt knife available
- YBS Foil joining tape available

Eaves

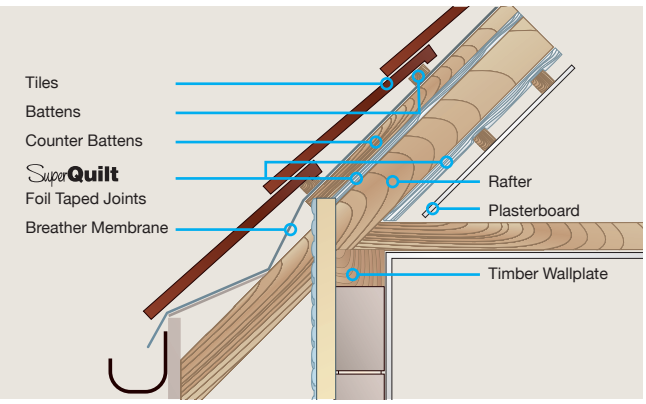

Valleys

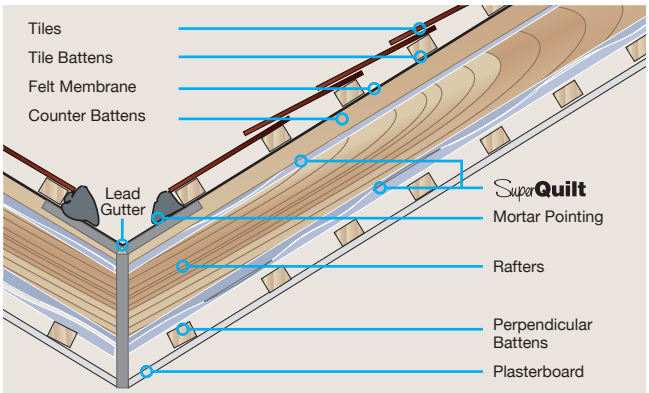

Downlighters

YBS recommend fire hoods are used with all recessed lighting.

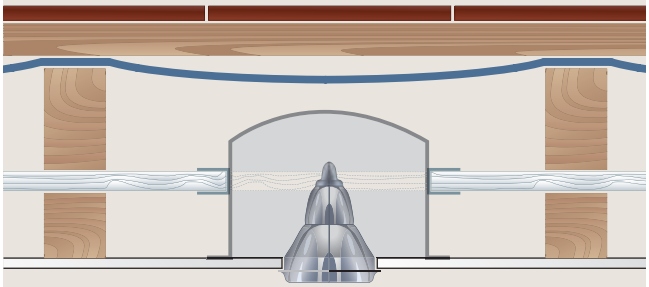

A circular hole is cut in the SuperQuilt to create a minimum 25mm clearance from the downlighter. The cut edge must be completely sealed using YBS Foil Tape.

Wall Applications.

Insulation for use in Walls

Benefits

- **Meets requirements of L1A, L1B 2010**
- **Fully certificated**
- **Thermally tested in accordance with EN 16012**
- **High thermal resistance of up to 3.00m²K/W**
- **Ideal for New build & Refurbishment**
- **Effective solar over-heating barrier**
- **Lightweight, thin & flexible**
- **Fast and simple installation**
- **Vapour control layer**

SuperQuilt is a very flexible, easy to fit, multilayer insulation thermally tested in accordance with EN 16012 achieving a high thermal resistance of up to 3.00m²K/W for SuperQuilt accompanied by a 25mm air cavity either side of the material.

How does SuperQuilt Work?

Due to the special composition of multi-layers of insulation, SuperQuilt effectively deals with all forms of energy transfer (i.e. conduction, convection and radiation). SuperQuilt works most effectively by reflecting infra-red radiation. This means that not only is SuperQuilt effective in winter by reflecting heat back into the building and cold out, but also in summer SuperQuilt is a very effective barrier to solar overheating which reduces the need for artificial cooling systems as it prevents the accumulation of heat within the building.

General Fixing Instructions

Installation of SuperQuilt for Timber Frame and Masonry Wall Applications and additional insulation products should be in accordance with the Certificate, YBS fixing instructions and current good building practice.

When the SuperQuilt is cut to fit around openings, care should be taken to minimise gaps. SuperQuilt can be cut easily using sharp scissors or a knife.

The surfaces of the masonry wall should be sound and free from loose material; large projections should be removed and holes filled and levelled. A survey of the wall may be required to establish the extent of any packing that may be required to ensure a uniform plane for the materials to be fixed.

Bearing surfaces for timber battens should comply with BS 8212 : 1995. The depth of timber battens will determine the air space achieved on either side of the SuperQuilt, YBS recommend 25mm battens.

All joints and perforations in the products must be securely sealed with YBS Foil Tape

Services may be accommodated within the void created by the dry lining system.

If the wall you are refurbishing has a damp or mould issue, this needs to/must be rectified before any insulation is installed.

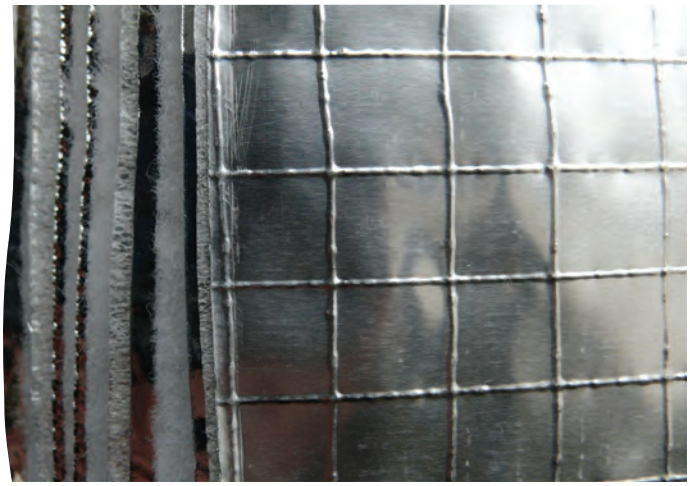

Timber Frame & Dormer Cheeks

Fixing Instructions

Installation of SuperQuilt for Timber Frame wall applications and additional insulation products should be in accordance with the certificate, YBS fixing instructions and current good building practice.

SuperQuilt is applied directly from the roll either vertically or horizontally depending on the wall height, pulled tight and stapled onto the timber studs at minimum 300mm centres.

SuperQuilt should be overlapped at each joint by approx. 50mm and stapled onto the battens, the joins should be sealed using 75mm YBS Foil Tape.

Perpendicular counter battens, recommended 25mm by 38mm are fixed to the wall. Battens must always be placed at the top and bottom of the wall and around the perimeter of doors and windows.

The plasterboard is fixed over the materials and onto the battens in the usual manner.

U-Value Combined Method (W/m²K)			0.24
	Thickness (mm)	Conductivity (W/mK)	Resistance (m²K/W)
Outside Surface	-	-	0.060
Brick, External	102.50	0.770	0.133
Cavity	50.00	-	0.665
BreatherFoil FR	4.00	-	0.125
Sheathing Board	12.00	0.130	0.092
Stud Cavity	89.00	-	0.740
SuperQuilt	40.00		1.52
Batten Cavity	38.00		0.740
Plasterboard	12.50	0.190	0.066
Inside Surface	-	-	0.120

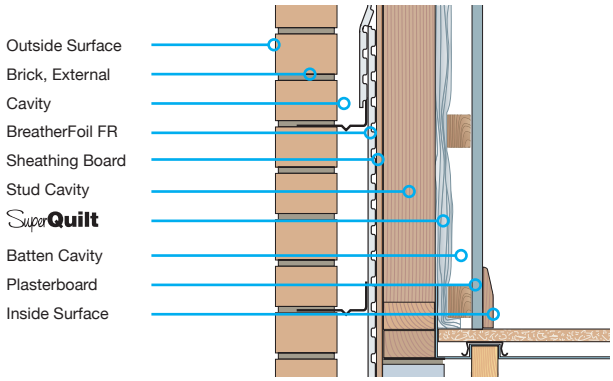

U-Value table

*For custom calculations please send request to technical@ybsinsulation.com

Description	25mm Batten	38mm Batten
SuperQuilt and YBS BreatherFoil FR	0.25 W/m²k	0.24 W/m²k
SuperQuilt, YBS BreatherFoil FR and 50mm Glasswool 0.040	0.21 W/m²k	0.20 W/m²k
SuperQuilt, YBS BreatherFoil FR and 100mm Glasswool 0.040	0.17 W/m²k	0.16 W/m²k
SuperQuilt, YBS BreatherFoil FR and 25mm PIR 0.022	0.21 W/m²k	0.20 W/m²k
SuperQuilt, YBS BreatherFoil FR and 50mm PIR 0.022	0.18 W/m²k	0.17 W/m²k
SuperQuilt, YBS BreatherFoil FR and 100mm PIR 0.022	0.14 W/m²k	0.14 W/m²k
SuperQuilt, YBS BreatherFoil FR and 140mm PIR 0.022	0.13 W/m²k	0.12 W/m²k
SuperQuilt, YBS BreatherFoil and SuperQuilt	0.17 W/m²k	0.17 W/m²k
SuperQuilt, Standard Breather Membrane	0.30 W/m²k	0.28 W/m²k
SuperQuilt, Standard Breather Membrane and 50mm Glasswool 0.040	0.24 W/m²k	0.22 W/m²k
SuperQuilt, Standard Breather Membrane and 100mm Glasswool 0.040	0.19 W/m²k	0.18 W/m²k
SuperQuilt, Standard Breather Membrane and 25mm PIR 0.022	0.25 W/m²k	0.23 W/m²k
SuperQuilt, Standard Breather Membrane and 50mm PIR 0.022	0.21 W/m²k	0.20 W/m²k
SuperQuilt, Standard Breather Membrane and 100mm PIR 0.022	0.16 W/m²k	0.15 W/m²k
SuperQuilt, Standard Breather Membrane and 140mm PIR 0.022	0.14 W/m²k	0.13 W/m²k
SuperQuilt, Standard Breather Membrane and SuperQuilt	0.19 W/m²k	0.18 W/m²k

Cavity Wall

Fixing Instructions

A spider clip is fitted on to the wall tie against the inner leaf and this creates the minimum cavity between the product and the blockwork.

The initial run of SuperQuilt is positioned over the wall ties, ensuring that it is kept taut but with sufficient drop to below floor insulation. SuperQuilt can be cut with a sharp blade to fit onto wall ties. The top edge of the material should be a minimum of 75mm over the top row of the wall ties giving a weathered lap joint.

When a full run is in position, the retaining clip is fixed to the wall tie to keep the SuperQuilt central to the cavity.

The second leaf is built up to the topmost line of the wall ties, (or two courses below) and the second run of SuperQuilt installed ensuring a minimum lap of 75mm. Vertical joints in the SuperQuilt should always be on a line of wall ties, ensuring a 100mm lap (ie 50mm either side of the wall tie) and sealed using YBS Foil Tape

At internal and external corners a recommended air space of 25mm must be maintained.

U-Value Combined Method (W/m²K)			0.24
	Thickness (mm)	Conductivity (W/mK)	Resistance (m²K/W)
Outside Surface	-	-	0.040
Brick, External	102.50	0.770	0.133
Cavity	50.00	-	0.740
SuperQuilt	40.00		1.52
Cavity	20.00		0.740
Thermal Block	100.00	0.110	0.909
Plaster Dabs	15.00	-	0.170
Plasterboard	12.50	0.190	0.066
Inside Surface	-	-	0.130

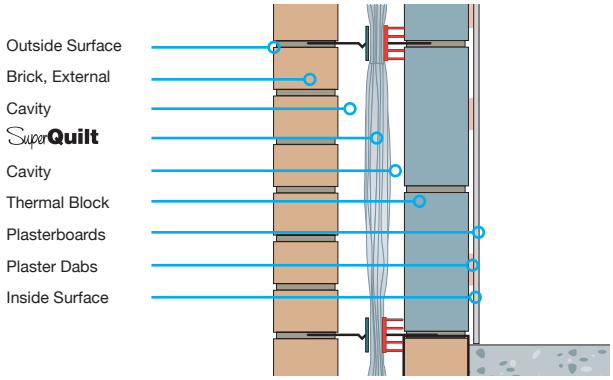

U-Value table

*For custom calculations please send request to technical@ybsinsulation.com

Description	100mm Cavity	110mm Cavity
SuperQuilt and 100mm Dense Block 1.130	0.31 W/m²k	0.29 W/m²k
SuperQuilt and 100mm Medium Block 0.500	0.30 W/m²k	0.28 W/m²k
SuperQuilt and 100mm Lightweight Block 0.250	0.29 W/m²k	0.27 W/m²k
SuperQuilt and 100mm Thermal Block 1.110	0.26 W/m²k	0.24 W/m²k
SuperQuilt and 100mm Thermal Block 0.110 Thin Mortar	0.25 W/m²k	0.24 W/m²k
SuperQuilt and 140mm Dense Block 1.130	0.31 W/m²k	0.29 W/m²k
SuperQuilt and 140mm Medium Block 0.500	0.29 W/m²k	0.27 W/m²k
SuperQuilt and 140mm Lightweight Block 0.250	0.25 W/m²k	0.26 W/m²k
SuperQuilt and 140mm Thermal Block 1.110	0.24 W/m²k	0.23 W/m²k
SuperQuilt and 140mm Thermal Block 0.110 Thin Mortar	0.23 W/m²k	0.22 W/m²k

Dry Lining

Fixing Instructions

Vertical counter battens, minimum 25mm by 38mm battens are fixed to the wall at 400 or 600mm centres. Battens must always be placed at the top and bottom of the wall and around the perimeter of doors and windows.

SuperQuilt is applied directly from the roll either vertically or horizontally depending on the wall height, pulled tight and stapled onto the battens at minimum 300mm centres.

SuperQuilt should be overlapped at each joint by approx. 50mm and stapled onto the battens, the joins should be sealed using 75mm YBS Foil Tape.

Counter battens are fixed to the wall battens through the material at 400 or 600mm centres.

The plasterboard is fixed over the SuperQuilt and onto the battens in the usual manner.

If there is a concern regarding condensation because of the installation of an insulating vapour barrier, please supply full build up information on fax or email to our technical team and they can carry out a condensation risk analysis for you.

U-Value Combined Method (W/m²K)			0.28
	Thickness (mm)	Conductivity (W/mK)	Resistance (m²K/W)
Outside Surface	-	-	0.040
Brick, External	100.00	0.770	0.292
Cavity	50.00	-	0.180
Block	100.00	1.130	0.89
Batten Cavity	38.00	-	0.740
SuperQuilt	40.00		1.52
Batten Cavity	38.00		0.740
Insulated Plasterboard	30.00	-	0.560
Inside Surface	-	-	0.130

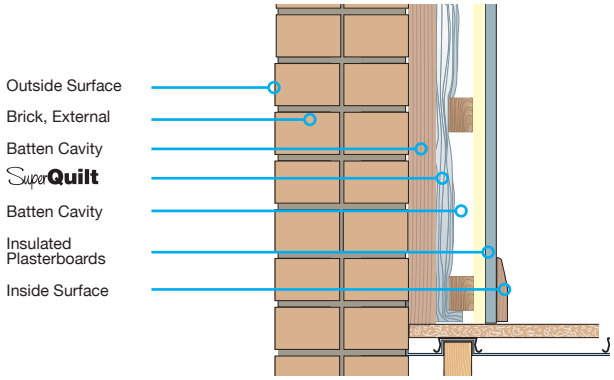

U-Value table

*For custom calculations please send request to technical@ybsinsulation.com

Description	25mm Batten	38mm Batten
SuperQuilt and Solid Wall	0.34 W/m²k	0.29 W/m²k
SuperQuilt, Solid Wall and 30mm Insulated Plasterboard EPS	0.29 W/m²k	0.26 W/m²k
SuperQuilt, Solid Wall and 40mm Insulated Plasterboard EPS	0.27 W/m²k	0.24 W/m²k
SuperQuilt, Solid Wall and SuperQuilt	0.22 W/m²k	0.19 W/m²k
SuperQuilt and Cavity Wall un-insulated	0.33 W/m²k	0.28 W/m²k
SuperQuilt, Cavity Wall un-insulated & 30mm Ins. Plasterboard EPS	0.28 W/m²k	0.25 W/m²k
SuperQuilt, Cavity Wall un-insulated & 40mm Ins. Plasterboard EPS	0.26 W/m²k	0.23 W/m²k
SuperQuilt, Cavity Wall un-insulated & SuperQuilt	0.22 W/m²k	0.18 W/m²k
SuperQuilt and Cavity Wall Insulated	0.25 W/m²k	0.22 W/m²k
SuperQuilt, Cavity Wall Insulated & 30mm Ins. Plasterboard EPS	0.23 W/m²k	0.21 W/m²k
SuperQuilt, Cavity Wall Insulated & 40mm Ins. Plasterboard EPS	0.22 W/m²k	0.20 W/m²k
SuperQuilt, Cavity Wall Insulated & SuperQuilt	0.18 W/m²k	0.16 W/m²k

Dwarf Wall

Fixing Instructions

Installation of SuperQuilt for dwarf wall applications with additional insulation products should be in accordance with the certificate, YBS fixing instructions and current good building practice.

SuperQuilt is applied directly from the roll either vertically or horizontally depending on the wall height, pulled tight and stapled onto the timber studs at minimum 300mm centres.

SuperQuilt should be overlapped at each joint by approx. 50mm and stapled onto the battens, the joins should be sealed using 75mm YBS Foil Tape.

Perpendicular counter battens, recommended 25mm by 38mm are fixed to the wall. Battens must always be placed at the top and bottom of the wall and around the perimeter of doors and windows.

The plasterboard is fixed over the products and onto the battens in the usual manner.

U-Value Combined Method (W/m²K)			0.19
	Thickness (mm)	Conductivity (W/mK)	Resistance (m²K/W)
Outside Surface	-	-	0.040
Loft Void	-	-	0.500
PIR (Between Studs)	50.00	0.22	2.174
Stud cavity	35.00	-	0.740
SuperQuilt	40.00		1.52
Batten Cavity	38.00		0.740
Plasterboard	12.50	0.190	0.066
Inside Surface	-	-	0.130

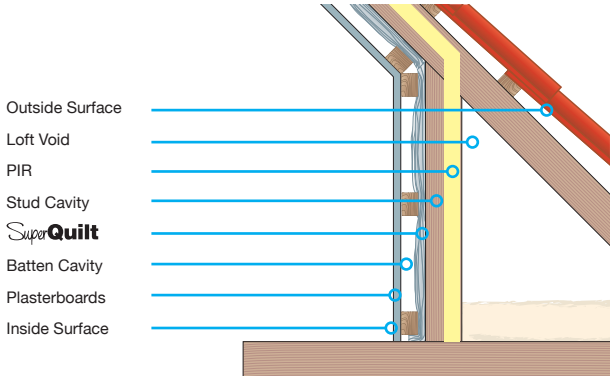

U-Value table

*For custom calculations please send request to technical@ybsinsulation.com

Description	25mm Batten	38mm Batten
SuperQuilt and 50mm Glasswool 0.040	0.24 W/m²k	0.22 W/m²k
SuperQuilt and 100mm Glasswool 0.040	0.19 W/m²k	0.18 W/m²k
SuperQuilt and 25mm PIR 0.022	0.25 W/m²k	0.23 W/m²k
SuperQuilt and 50mm PIR 0.022	0.21 W/m²k	0.19 W/m²k
SuperQuilt and 75mm PIR 0.022	0.18 W/m²k	0.17 W/m²k
SuperQuilt and 100mm PIR 0.022	0.16 W/m²k	0.15 W/m²k
SuperQuilt Two Layer	0.21 W/m²k	0.19 W/m²k

External Render

Fixing Instructions

All timber exposed to the outer cavity, except naturally durable species should be treated.

SuperQuilt is applied directly from the roll either vertically or horizontally depending on the wall height, pulled tight and stapled onto the timber battens at minimum 300 mm centres.

SuperQuilt should be overlapped at each joint by approximately 50 mm and stapled onto the battens, the joins should be sealed using 75mm YBS Foil Tape.

Vertical battens, recommended 25 mm by 38 mm are fixed to the vertical battens; battens should always be placed at the top and bottom of the wall and around the perimeter of doors and windows.

The carrier board is fixed over the product and onto the battens, the external rendered finishing should comply with BS EN 13914-119.

U-Value Combined Method (W/m²K)			0.24
	Thickness (mm)	Conductivity (W/mK)	Resistance (m²K/W)
Outside Surface	-	-	0.040
Carrier Board	12.00	0.833	0.012
Batten Cavity	38.00	-	0.665
SuperQuilt	40.00	-	1.52
Batten Cavity	20.00		0.740
Brickwork			
Plasterboard	12.50	0.190	0.066
Inside Surface	-	-	0.130

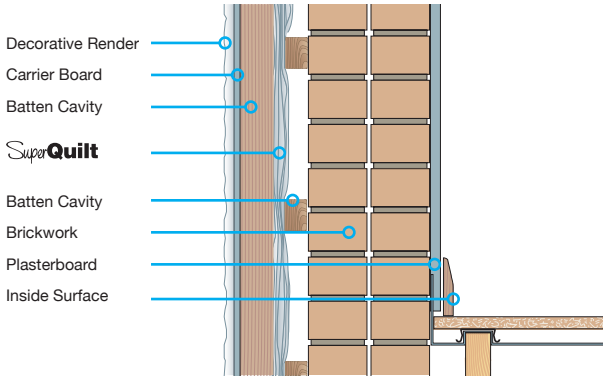

U-Value table

*For custom calculations please send request to technical@ybsinsulation.com

Description	25mm Batten	38mm Batten
SuperQuilt and YBS BreatherFoil FR	0.25 W/m²k	0.24 W/m²k
SuperQuilt, YBS BreatherFoil FR and 50mm Glasswool 0.040	0.21 W/m²k	0.20 W/m²k
SuperQuilt, YBS BreatherFoil FR and 25mm PIR 0.022	0.21 W/m²k	0.20 W/m²k
SuperQuilt, YBS BreatherFoil FR and 50mm PIR 0.022	0.18 W/m²k	0.17 W/m²k
SuperQuilt, YBS BreatherFoil and SuperQuilt	0.17 W/m²k	0.17 W/m²k
SuperQuilt, Standard Breather Membrane	0.30 W/m²k	0.28 W/m²k
SuperQuilt, Standard Breather Membrane and 50mm Glasswool 0.040	0.24 W/m²k	0.22 W/m²k
SuperQuilt, Standard Breather Membrane and 25mm PIR 0.022	0.25 W/m²k	0.23 W/m²k
SuperQuilt, Standard Breather Membrane and 50mm PIR 0.022	0.21 W/m²k	0.20 W/m²k
SuperQuilt, Standard Breather Membrane and SuperQuilt	0.19 W/m²k	0.18 W/m²k

Floor Applications.

Insulation for use in Floors

Benefits

- **Fully certificated**
- **Fast and simple installation**
- **High core thermal resistance of 1.38m²K/W**
- **Tear Resistant**
- **Effective in summer and winter**
- **For suspended & floating floors**
- **Lightweight, thin & flexible**

SuperQuilt is a very flexible, easy to fit, multilayer insulation thermally tested in accordance with EN12667 achieving a high core thermal resistance of 1.38m²K/W for SuperQuilt.

How does SuperQuilt Work?

Due to the special composition of multi-layers of insulation, SuperQuilt effectively deals with all forms of energy transfer (i.e. conduction, convection and radiation). SuperQuilt works most effectively by reflecting infra-red radiation. This means that not only is SuperQuilt effective in winter by reflecting heat back into the building and cold out, but also in summer, SuperQuilt is a very effective barrier to solar overheating which reduces the need for artificial cooling systems as it prevents the accumulation of heat within the building.

General Fixing Instructions

Installation of SuperQuilt for floor applications should be in accordance with the certificate, YBS fixing instructions and current good building practice.

SuperQuilt must be installed with a 50mm overlap.

SuperQuilt can be cut with a YBS SuperQuilt cutter, craft knife or a sharp pair of scissors.

SuperQuilt can be easily fixed with staples at regular intervals. Minimum 14mm stainless steel or galvanised staples are recommended.

No protective clothing/handling required.

P/A Ratio

The heat loss in a floor is greater at the exposed perimeter edge of the floor. To calculate the U-value, the exposed perimter edge to area ratio needs to be worked out e.g. a 100m² area, semi-detached house with 3 external walls of 10m each has a perimeter to area ratio 0.3 (i.e. 30m : 100m² = 0.3).

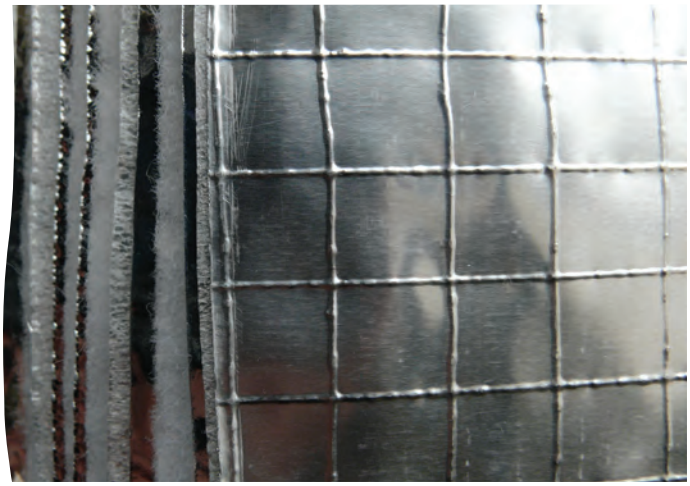

Suspended Timber Floor

Fixing Instructions

SuperQuilt is rolled out over the joists, then stapled in place to create required airspace or nailed in place through the YBS saddle clips to maintain the required 50mm airspace (4 saddle clips per m²). The horizontal joints are tightly overlapped and left open to allow any moisture accumulation to dissipate. SuperQuilt should be sealed around the perimeter or brought up above the floor deck. The decking is then fixed at 200mm centres with screws 37mm into the joists.

SuperQuilt can be used in conjunction with Superfloor Clips to provide a channel for underfloor heating pipework; please visit www.ybsinsulation and look under Superfloor for more information. (Please note that thermal outputs for underfloor heating have not been tested with SuperQuilt)

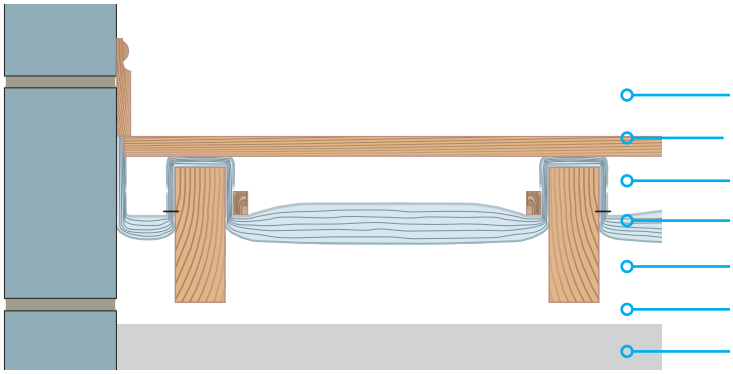

Construction	Thickness (mm)
Inside Surface	-
Chipboard Deck	22.00
Joist Cavity	50.00
SuperQuilt	40.00
Joist Cavity	100.00
Ventilated Void	-
Ground	-

U-Value table

P/A Ratio	U-Value (with 50mm Cavity above)	U-Value (with 100mm Cavity above)
0.1	0.13 W/m²k	0.12 W/m²k
0.2	0.18 W/m²k	0.16 W/m²k
0.3	0.21 W/m²k	0.18 W/m²k
0.4	0.22 W/m²k	0.20 W/m²k
0.5	0.24 W/m²k	0.20 W/m²k
0.6	0.24 W/m²k	0.21 W/m²k
0.7	0.25 W/m²k	0.22 W/m²k
0.8	0.26 W/m²k	0.22 W/m²k
0.9	0.26 W/m²k	0.23 W/m²k
1	0.27 W/m²k	0.23 W/m²k

Floating Timber Floor

Fixing Instructions

SuperQuilt is rolled out onto the concrete floor leaving enough edge overlap to protrude above the floor deck. Timber joists/battens are then laid on top of the SuperQuilt, spaced at centres to suit the particular flooring. The deck is then fixed at 200mm centres with screws 37mm into the joists/battens.

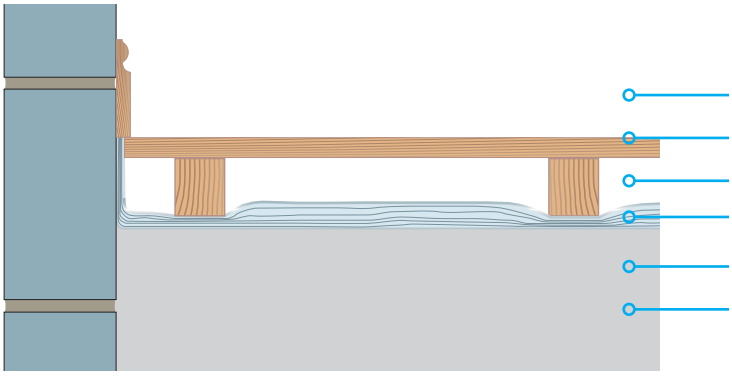

Construction	Thickness (mm)
Inside Surface	-
Chipboard Deck	22.00
Joist Cavity	50.00
SuperQuilt	40.00
Concrete Slab	150.00
Ground	-

U-Value table

P/A Ratio	U-Value (with 50mm Cavity above)	U-Value (with 100mm Cavity above)
0.1	0.13 W/m²k	0.12 W/m²k
0.2	0.20 W/m²k	0.17 W/m²k
0.3	0.24 W/m²k	0.20 W/m²k
0.4	0.26 W/m²k	0.22 W/m²k
0.5	0.28 W/m²k	0.23 W/m²k
0.6	0.30 W/m²k	0.24 W/m²k
0.7	0.31 W/m²k	0.25 W/m²k
0.8	0.32 W/m²k	0.26 W/m²k
0.9	0.33 W/m²k	0.27 W/m²k
1	0.34 W/m²k	0.27 W/m²k

Crawl Space & Cellars

Fixing Instructions

SuperQuilt is rolled out under the floor joists than stapled in place. Access is gained using the under floor crawl space. The horizontal joints are tightly overlapped and left open to allow any moisture accumulation to dissipate. SuperQuilt should be sealed around the perimeter or brought up above the floor deck.

Accessories

- SuperQuilt knife available
- YBS Foil joining tape available

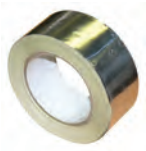

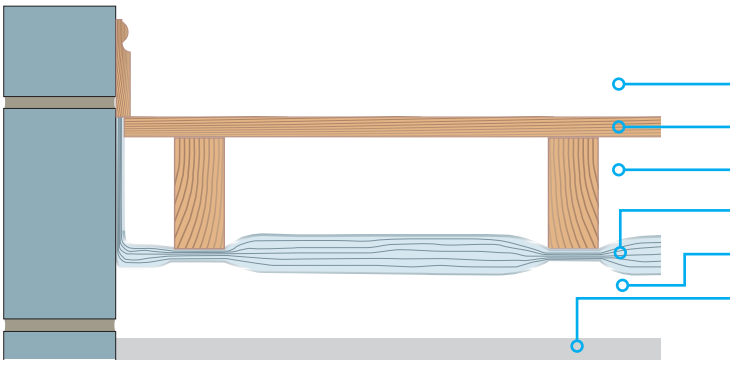

Construction	Thickness (mm)
Inside Surface	-
Tongue & Groove Floorboards	22.00
Joist Cavity	150.00
SuperQuilt	40.00
Ventilated Void	-
Ground	-

U-Value table

P/A Ratio	U-Value (with 150mm Cavity above)	U-Value (with 200mm Cavity above)
0.1	0.11 W/m²k	0.11 W/m²k
0.2	0.14 W/m²k	0.14 W/m²k
0.3	0.16 W/m²k	0.15 W/m²k
0.4	0.17 W/m²k	0.16 W/m²k
0.5	0.18 W/m²k	0.17 W/m²k
0.6	0.18 W/m²k	0.17 W/m²k
0.7	0.19 W/m²k	0.18 W/m²k
0.8	0.19 W/m²k	0.18 W/m²k
0.9	0.19 W/m²k	0.18 W/m²k
1	0.20 W/m²k	0.19 W/m²k

registered LABC

BDA KEUR kiwa Partner for progress

BDA Agrément Nr. BAR 12-454/01

Warrington Fire research

Scottish Type Approval Scheme

CAD Drawings

Can now be downloaded from www.ybsinsulation.com

Technical Properties

Product Description		
19 Components		
Thickness	40mm approx.	
Weight	800g/m²	
Mechanical Properties	Value	Reference Standard
Thermal performance		
Core	1.52m²K/W	BS EN 16012
Roof	2.50m²K/W	BS EN 6946
Wall	3.00m²K/W	BS EN 6946
Floor	4.45m²K/W	BS EN 6946
Flammability	Class E	BS EN 13501-1
Water vapour resistance	1569MNs/g	BS EN 12572
Emission coefficients of surfaces	0.02	BS EN 16012
Tensile strength	142KPA	BS EN 1608
Packaging	**15m²**	**7.5m²**
Width	1.5m	1.5m
Length	10m	5m
Weight	13.5Kg	6.75Kg

YBS Insulation

HIGH QUALITY PRODUCTS FOR THE BUILDING INDUSTRY

Yorkshire Building Services (Whitwell) Ltd Crags Industrial Park, Morven Street, Creswell, Derbyshire, S80 4AJ
Tel: **+44 (0) 844 99 100 44** Fax: **+44 (0) 844 99 100 55**
E-Mail: **sales@ybsinsulation.com** Web: **www.ybsinsulation.com**

YBS V4 03/2013