87968

Vent-Axia®

GB

VA100
SELV 12 RANGE

Installation and Wiring Instructions

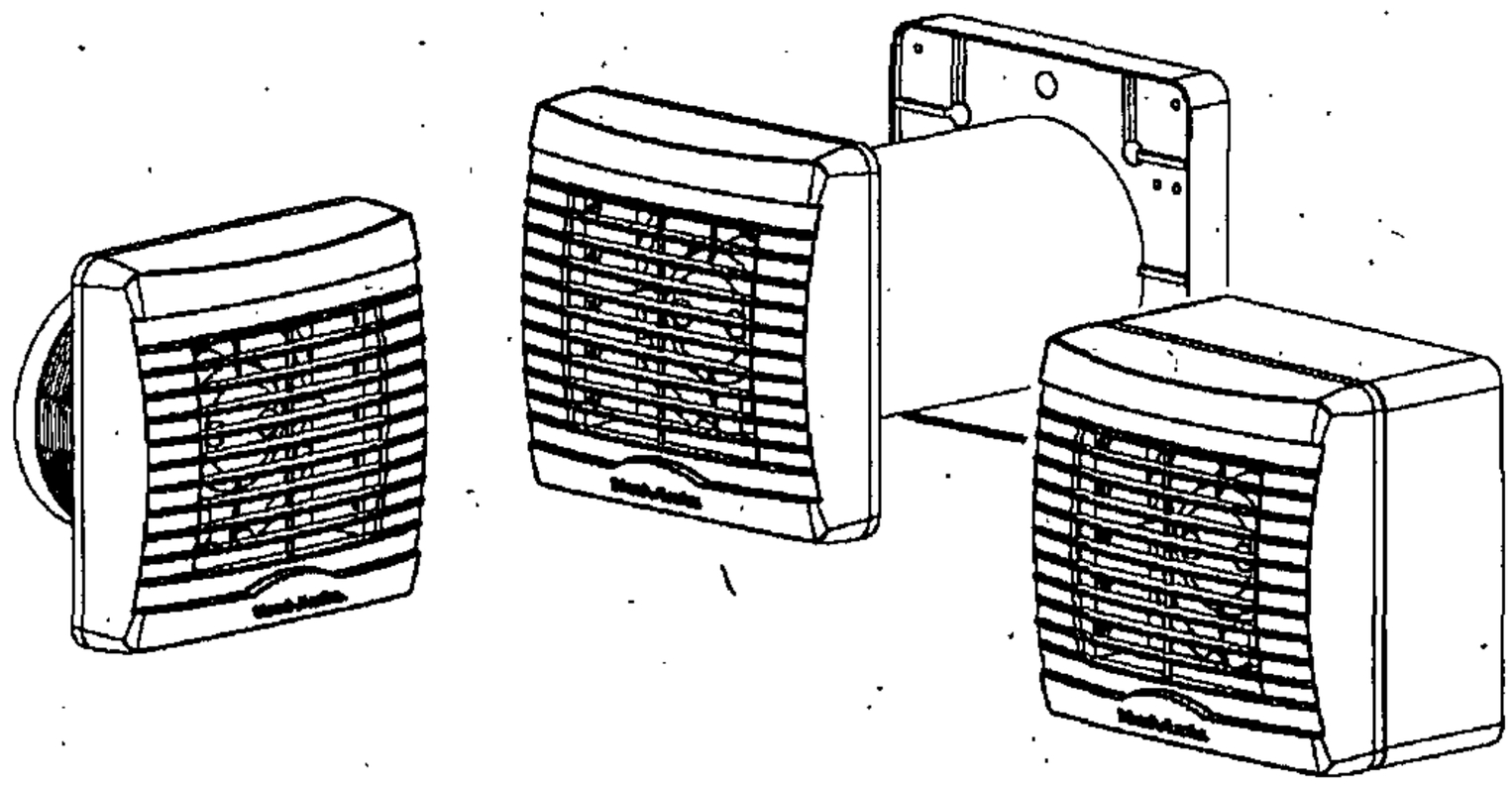

TYPE	STOCK REF.No	DESCRIPTION
VA100SVL12	25 81 10B	FAN AND CONTROLLER
VA100SVX12	25 83 10B	SHUTTERED FAN AND CONTROLLER
VA100SVXT12	25 84 10B	SHUTTERED FAN AND CONTROLLER WITH TIMER OVERRUN (ADJUSTABLE)
VA100SVLH12	25 81 12C	FAN WITH INTEGRAL HUMIDITY SENSOR AND CONTROLLER
VA100SVXH12	25 83 12C	SHUTTERED FAN WITH INTEGRAL HUMIDITY SENSOR AND CONTROLLER
VA100SVXHT12	25 85 12	SHUTTERED FAN WITH INTEGRAL HUMIDITY SENSOR, TIMER OVERRUN AND CONTROLLER

CE

FAN UNITS 12V 50Hz SELV (CLASS III)
CONTROLLERS 220-240V 50Hz MAINS SUPPLY (CLASS II)
WITH 12V 50Hz SELV OUTPUT

PLEASE READ INSTRUCTIONS IN CONJUNCTION WITH ILLUSTRATIONS. PLEASE SAVE THESE INSTRUCTION

FIG.1

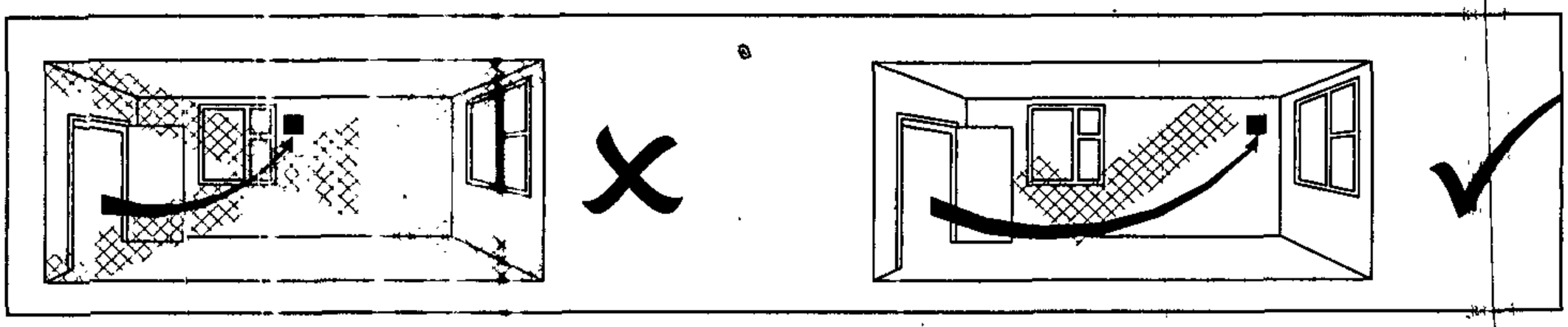

FIG.2 VA100SVL 12, VA100SVX 12, VA100SVLH 12 AND VA100SVXH 12.

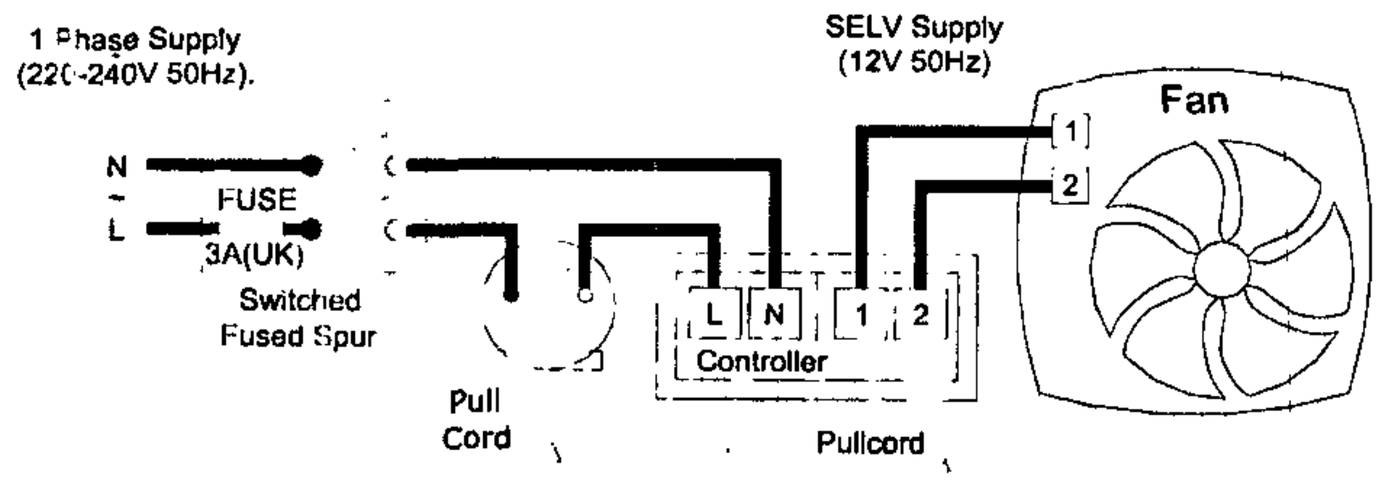

PLEASE NOTE: ONLY VA100SVLH 12 AND VA100SVXH 12 MODELS HAVE INTEGRAL PULLCORDS FITTED.

FIG.3a VA100SVXT 12

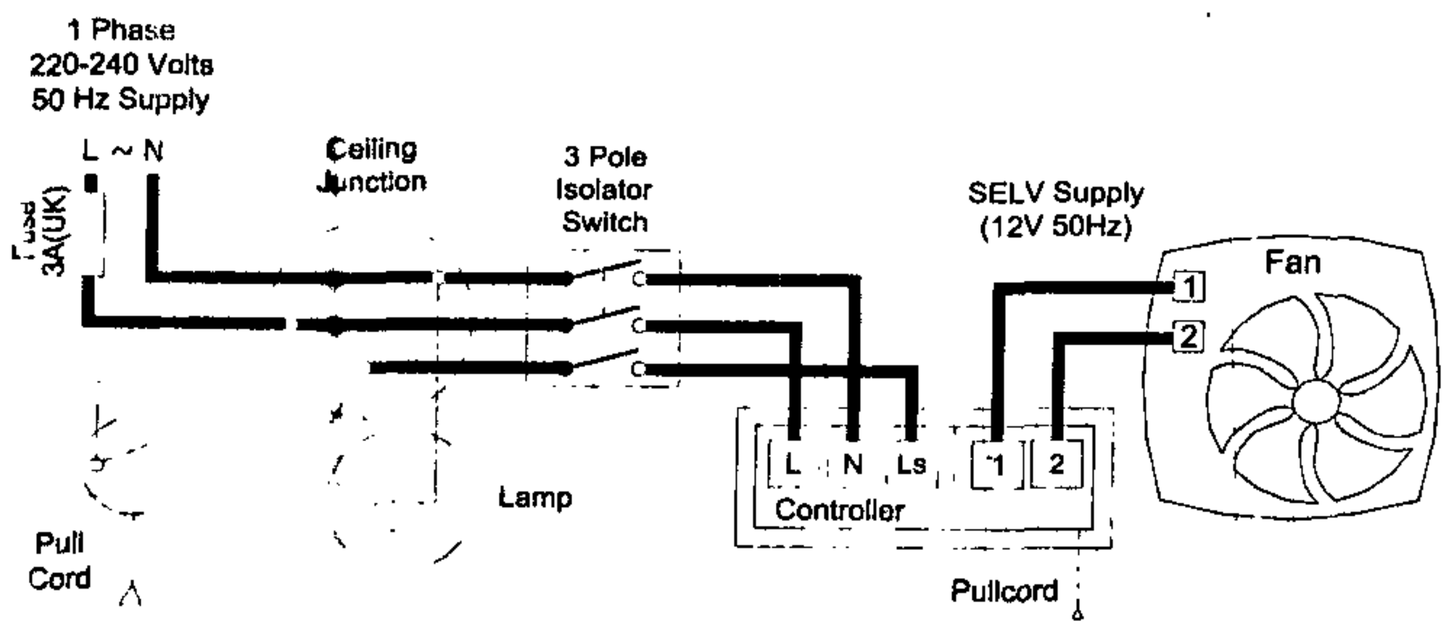

IMPORTANT "Ls" SIGNAL MUST BE THE SAME PHASE AS THE MAINS INPUT PHASE.
(Note:- VA100SVXT12 Controller has no pullcord on the controller)

FIG.3b VA100SVXHT12

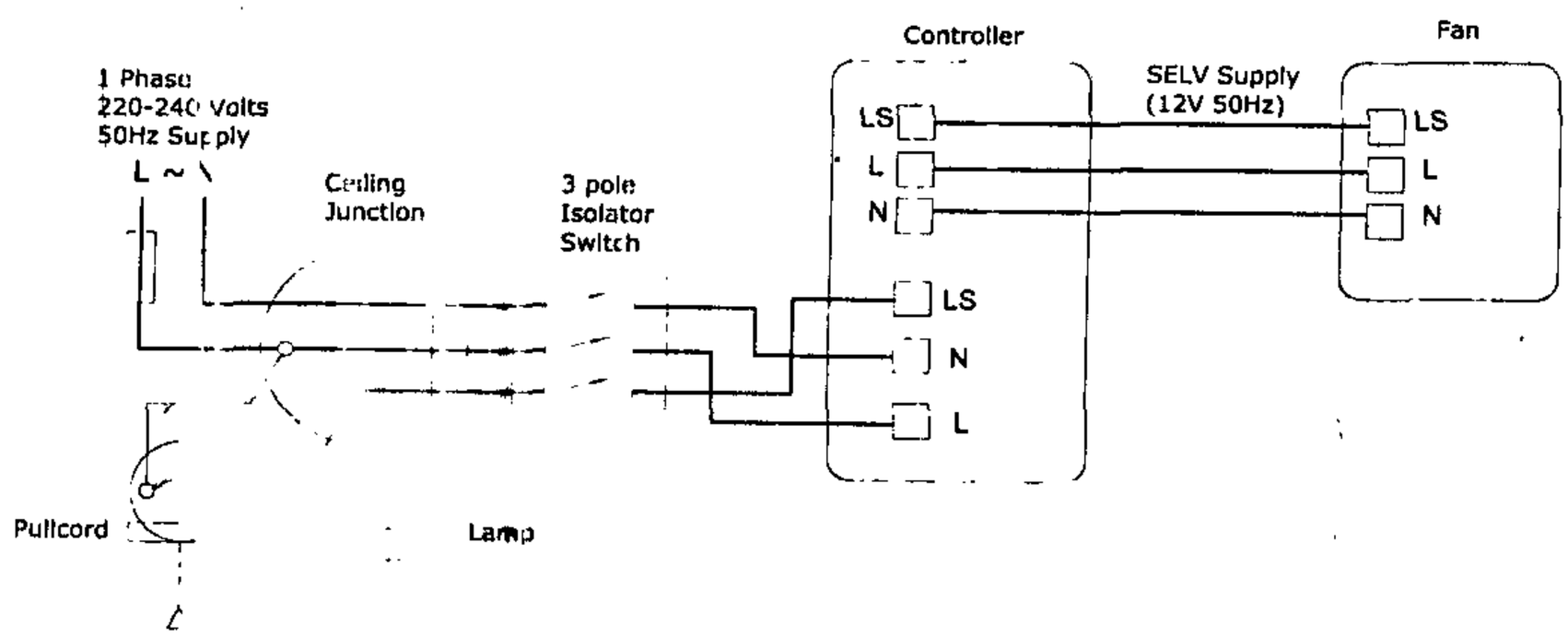

© Copyright Vent-Axia 2006

Installation and Wiring Instructions for the VA100 SELV 12 Fan & Controller.

IMPORTANT:
READ THESE INSTRUCTIONS BEFORE COMMENCING THE INSTALLATION

DO NOT install this product in areas where the following may be present or occur:

- Excessive oil or a grease laden atmosphere.
- Corrosive or flammable gases, liquids or vapours.
- Ambient temperatures higher than 40°C or less than –5°C.
- Possible obstructions which would hinder the access or removal of the Fan.

SAFETY AND GUIDANCE NOTES

A. All wiring to be in accordance with the current I.E.E. Regulations (BS7671), or the appropriate standards of your country. All regulations must be strictly followed to prevent hazards to life and property both during and after installation, and during any subsequent servicing and maintenance. Electrical work may need to comply with building regulations and be carried out by a person who is competent to do the work. If in doubt you should contact your supplier or local electrical contractor.
B. The fan should be provided with a local isolator switch capable of disconnecting all poles, having a contact separation of at least 3mm.
C. Ensure that the mains supply (Voltage, Frequency, and Phase) complies with the rating label.
D. The fan should only be used in conjunction with the appropriate Vent-Axia products.
E. It is recommended that the connection to the fan connector terminals is made with flexible cable.
F. When the fan is used to remove air from a room containing a fuel-burning appliance, ensure that the air replacement is adequate for both the fan and the fuel-burning appliance.
G. Where ducted fans are used to handle moisture-laden air, a condensation trap should be fitted. Horizontal ducts should be arranged to slope slightly downwards away from the fan.
H. This appliance is not intended for use by young children or infirm persons without supervision.
I. Young children should be supervised to ensure that they do not play with the appliance.

IMPORTANT:- ONLY CONNECT TOGETHER PRODUCTS FROM THE VA100 SELV 12 RANGE SINCE THE FANS ARE SPECIALY DESIGNED TO WORK ON 12V AC AND ARE NOT COMPATIBLE WITH OTHER VENT-AXIA CONTROLLERS.
DO NOT CONNECT MORE THAN ONE FAN TO THE CONTROLLER.

DESCRIPTION

The VA100 SELV 12 range from Vent-Axia is a 100mm extract fan for domestic Shower/bathrooms available as window, wall or panel mounted models. Model options with shutter, timer and auto humidity control.

GENERAL

This carton contains a fan and controller. Unpack these items taking care to note the product model reference from the outside of the carton, e.g. VA100SVL12.

SITING THE CONTROLLER

1.The controller must not be installed in a shower cubicle or enclosure. It must be sited away from direct sources of water spray and out of reach (1.5m) of a person using a fixed bath or shower.
2.Site away from direct sources of heat. Ambient temperature range 0 to 40°C. Do not site in an area containing excessive levels of grease.
3.Decide where to site the controller and fan (see section siting the fan), and work out the required cable runs.

FITTING THE CONTROLLER

NOTE: Please use a plastic two gang mounting box of minimum 28mm depth. (MK 2142, Legrand 80848 or similar). DO NOT use a metal mounting box (For VA100SVXHT12 model the controller is surface mounted with the fixing holes provided in the base plate).

1.Break-out the desired cable entry opening(s) in the mounting box.(Or base plate for VA100SVXHT12)
2.The mounting box/(base plate VA100SVXHT12 only) should be fixed to the mounting surface using screws (and possibly masonry plugs) compatible with the surface.

© Copyright Vent-Axia. 2006

WIRING THE CONTROLLER

Warning: The controller is only suitable for connection to a 220-240V 50Hz AC single phase mains electrical supply. It is double insulated (CLASS II) and therefore must not be earthed. It provides a 12V 50Hz AC Safety Extra Low Voltage for the VA100 SELV 12 range of fans. Note that only one fan must be connected to the controller.

1.Ensure that the mains supply is **switched OFF** before starting any wiring.
2.Connection of the controller to the mains supply, and SELV wiring between the controller and fan should be in accordance with current I.E.E regulations, BS7671, or the appropriate standards in your country.
3.Wiring should be via a switched spur with a 3A fuse (UK). The installation MUST be provided with a double pole isolator switch with a contact separation of at least 3mm. The switch or plug and socket should be located outside the room if it contains a fixed bath or shower, or in accordance with mandatory wiring and safety regulations.
4.The SELV wiring MUST be with mains voltage rated non-metallic sheathed cable. **The SELV wiring should be physically separated and insulated from any mains supply or other cabling.** Cut the outer sheathing back as little as possible so that the insulating sheath almost reaches the terminal block. 1.5mm² wire is recommended for cable runs up to 8m.
5.Make the electrical connections as shown in FIG.2, FIG.3a,FIG 3b as appropriate. When using surface wiring that is not contained in conduit, the cables must be securely clipped to the mounting surface, close to the controller.
6.Double check the wiring making sure all connections are secure. Fix the controller to the mounting box/base plate with the screw(s) provided. Do not over-tighten the screw(s). Take care not to trap any wires when fitting the two pieces together.
7.Proceed with the fitting and wiring of the fan before switching the mains supply on.

SITING THE FAN

1.The electrical supply to this fan is 12V AC SELV from the mains controller. This means that the fan may be installed within reach of a person using a fixed bath or shower, i.e. in a nearby wall or window. However, the fan must not be placed where it could be submerged in water or regularly exposed to direct water spray, e.g. from a shower head whether permanently fixed or movable.
2.Site away from direct sources of heat. Ambient temperature range 0 to 40°C. Do not site in an area containing excessive levels of grease.
3.If the fan is installed in a room containing a fuel burning appliance the installer must ensure that air replacement is adequate for both the fan and the fuel burning appliance. If the fan is used to supply air into the room the installer must ensure that the fan intake is located at least 600mm Away from any flue outlet.
4.Ducted Applications. These fans can be used with short lengths of rigid ducting, but check details first with your Vent-Axia sales centre. Where an excessive amount of moisture is present in the air, a condensation trap will need to be installed in the exhaust duct. Horizontal ducts should slope away from the fan unit. Ducts passing through an unheated roof void should be insulated.
5.A short circuit of the airflow should always be avoided by siting the fan as far away as possible from and opposite to the main source of air replacement. FIG.1

FITTING THE FAN

Note that there are two methods of cable entry to the fan. If recessed wiring is used then remove the label covering the cable entry hole. If surface wiring is used then the break-out region on the left hand side of the front grille should be removed.

Panel Model

N.B. This model should be installed into a closed duct system or protected by an exterior air grille.
1. Cut a 105mm diameter hole in the fixing surface.
2. Locate a small flat bladed screw driver in the cut-out at the bottom of the fascia, and gently pull forward to remove the front grille. Mark the screw centres through the holes in the fan back plate. Drill, plug and screw into position.
3. A piece of foam sealing strip is supplied for use around the fan spigot if required.

Window Model

(A window kit is available from vent-axia as a separate purchase).
1. Cut a 105mm diameter hole in the glass.
2. Fit spacers as required behind the fan back plate, engaging the locating pips in the corner holes.
3. Place the fan spigot through the hole in the glass from the inside, with a gasket on each side of the glass.
4. From the outside, place on the remaining spacer, with the locating pips facing outwards. For double-glazing and materials up to 40mm thick, one or more spacers may be discarded.
5. Draw the assembly together with the threaded fixing ring. Do not over-tighten.
6. Fix the exterior grille in position, using the screws provided, with the louvres pointing downwards.

© Copyright Vent-Axia 2006

Wall Model
(A wall kit is available from vent-axia as a separate purchase).
1. Cut a 115mm diameter hole through the wall and insert the wall sleeve with the large diameter sleeve on the room side. Slope the sleeve slightly downwards away from the fan. Cement both ends into position flush with the wall faces.
2. Locate a small flat bladed screw driver in the cut-out at the bottom of the fascia, and gently pull forward to remove the front grille. Mark the screw centres on the wall through the holes of the fan back plate. Drill plug and screw into position. Repeat for the external grille sub-frame. Fix exterior grille into position with the louvres positioned downwards.
3. A piece of foam sealing strip is supplied for use around fan spigot, if required.

AFTER INSTALLATION ENSURE IMPELLER ROTATES FREELY

WIRING INSTRUCTIONS
(All Models)
WARNING: ENSURE MAINS SUPPLY TO THE CONTROLLER IS SWITCHED OFF BEFORE BEFORE STARTING ANY WIRING. THIS FAN IS ONLY SUITABLE FOR CONNECTION TO 12V 50Hz AC ELECTRICAL SUPPLY FROM A VA100 SELV 12 CONTROLLER. IT IS A SAFETY EXTRA LOW VOLTAGE (CLASS III) APPLIANCE AND THEREFORE IT MUST NOT BE EARTHED.

- Note that there are two methods of cable entry to the fan. If recessed wiring is used then remove the label covering the cable entry hole. If surface wiring is used then the break-out region on the left hand side of the front grille should be removed.
- There must be a double pole isolating switch in the installation with a contact separation of at least 3mm.
  To gain access to the fan terminals, remove the safety cover screws Fig.4. and hinge up out of the way Fig.5.
  The cable from the controller should be retained by the cable clamp provided. The two wires should be connected to the terminal block as shown in FIG.2 or FIG.3a/FIG.3b

DO NOT CONNECT ANY OTHER PRODUCT(S) T0 THESE TERMINALS
SPIN IMPELLER TO CHECK FREE RUNNING and double check the wiring connections. Replace the front grille. Switch ON the mains supply to the controller and check operation (Refer to Function and testing section for your fan model).

FUNCTION AND TESTING

Models VA100SVL12, VA100SVX12 & VA100SVXHT12
When the controller is activated the fan and fan indicator will be turned on. The thermal shutter mechanism in the VA100SVX12 fan will open after about a minute.
Switching the controller off will turn the fan and indicator off. The VA100SVX12 shutter will close after about a minute.
Models VA100SVLH12 & VA100SVXH12
The humidity sensor has a pullcord for manual override. When the pullcord is operated the sensor indicator will light and the fan and fan indicator will be turned on. The thermal shutter mechanism in the VA100SVXH12 & VA100SVXHT12 fan will open after about a minute.
Operating the pullcord again will put the humidity sensor into automatic mode. There is no permanent fan OFF position. The fan indicator is on when the fan is on.
In automatic mode the humidity sensor switches the fan and fan indicator on when the room Relative Humidity (RH%) reaches the set-point. The VA100SVXH12, VA100SVXHT12 shutter will open after about a minute. The relative humidity set-point can be adjusted (see next section for details).

Humidity set-point adjustment (Models VA100SVLH12, VA100SVXH12 & VA100SVXHT12)
BEFORE ADJUSTING THE HUMIDITY SENSOR, SWITCH OFF THE MAINS SUPPLY.
Locate a small flat bladed screw driver in the cut-out at the bottom of the fascia, and gently pull forward to remove the front grille.
The sensor is factory set to switch on at about 72% RH. The set-point adjuster is mounted on a circuit board on the right hand side of the unit. It has RH% marked nearby FIG. 6.
TO LOWER the set-point turn the adjuster FIG.6 gently towards the '-' sign. This makes the controller **MORE** sensitive. (the fan will run more frequently).
TO RAISE the set-point turn the adjuster FIG.6 gently towards the '+' sign. This makes the controller **LESS** sensitive. (the fan will run less frequently).

Check all the connections then re-assemble the grille to the fan. Take care not to trap any wires or the pullcord string when fitting the grille back on to the fan.

Switch the mains supply back ON and check operation.

© Copyright Vent-Axia 2006

Model VA100SVXT12 & VA100SVXHT12
The controller contains an adjustable overrun timer. This is factory preset to provide a fan overrun time of approximately 20 minutes but can be adjusted between a minimum fan overrun of under 5 minutes to a maximum fan overrun of approximately 40 minutes.
When the room light switch is switched on the timer overrun circuit will be triggered and the fan will run. The indicator on the fan will also light. The thermal shutter mechanism in the VA100SVXT12, VA100SVXHT12 fan will open after about one minute
When the room light switch is switched off the indicator on the fan will remain lit and the fan will run on for the timed overrun period.

Timer overrun adjustment (Model VA100SVXT12 & VA100SVXHT12)
BEFORE ADJUSTING THE CONTROLLER/TIMER, SWITCH OFF THE MAINS SUPPLY.
Unscrew the fixing screws holding the controller to the mounting box, taking care to support the controller which is wired up.(model VA100SVXT12 only)
The controller is factory set to give a timed overrun of the fan of approximately 20 minutes. This fan overrun period can be adjusted up or down using the adjuster located on the back of the controller. (For VA100SVXHT12 see FIG.7 the fan cover must be removed to gain access to the adjuster)
Model VA100SVXT12 ONLY (Controller mounted adjuster)
TO DECREASE the fan overrun period turn the adjuster CLOCKWISE by hand or using a small screwdriver. The minimum fan over run period is approximately 5 minutes.
TO INCREASE the fan overrun period turn the adjuster ANTI-CLOCKWISE by hand or using a small screwdriver. The maximum fan overrun period is approximately 40 minutes.
Model VA100SVXHT12 ONLY (Fan mounted adjuster)
TO DECREASE the fan overrun period turn the adjuster ANTI-CLOCKWISE by using a small screwdriver. The minimum fan over run period is approximately 5 minutes.(FIG 7)
TO INCREASE the fan overrun period turn the adjuster CLOCKWISE by using a small screwdriver. The maximum fan overrun period is approximately 40 minutes.(FIG 7)

Check all connections then re-assemble the controller. Do not over tighten the screws. Take care not to trap any wires when fitting the two pieces together.(VA100SVXT12 only) For Model VA100SVXHT12 replace fan cover.
Switch the mains supply back ON and check operation.

Note:- If used in a lighting circuit, for reliable operation, we recommend a tungsten filament lamp. The manufactures of some fluorescent and low energy lighting systems indicate that these can interfere with electronic timer circuits.

SIMPLE FAULT FINDING
First switch the mains supply OFF and check the mains supply and all wiring connections. Spin impeller to check free running.

Problem:- The pullcord will not switch the fan off following Manual over ride of the humidity sensor.
If you have a VA100SVLH12, VA100SVXH12 or VA100SVXHT12 then the fan may be running because the humidity sensor is detecting a relative humidity higher than the set-point.
Note:- Upon installation it is possible that the humidity controller will make the fan run continuously until it has acclimatized to the environment.
If problems persist the fan may be incorrectly sited or requires the sensor set-point to be raised. The sensor can be made less sensitive to relative humidity (see section on Humidity set-point adjustment).

Problem:- During a bath or shower the fan does not come on.
Operate the humidity sensor pullcord and check the fan comes on under manual control. If you have a VA100SVLH12, VA100SVXH12 or VA100SVXHT12 then the fan may be off because the humidity sensor is detecting a relative humidity lower than the set-point. If problems persist the fan may be incorrectly sited or requires the sensor set-point to be lowered. The sensor can be made more sensitive to relative humidity (see section on Humidity set-point adjustment).

© Copyright Vent-Axia 2006

Fig.4

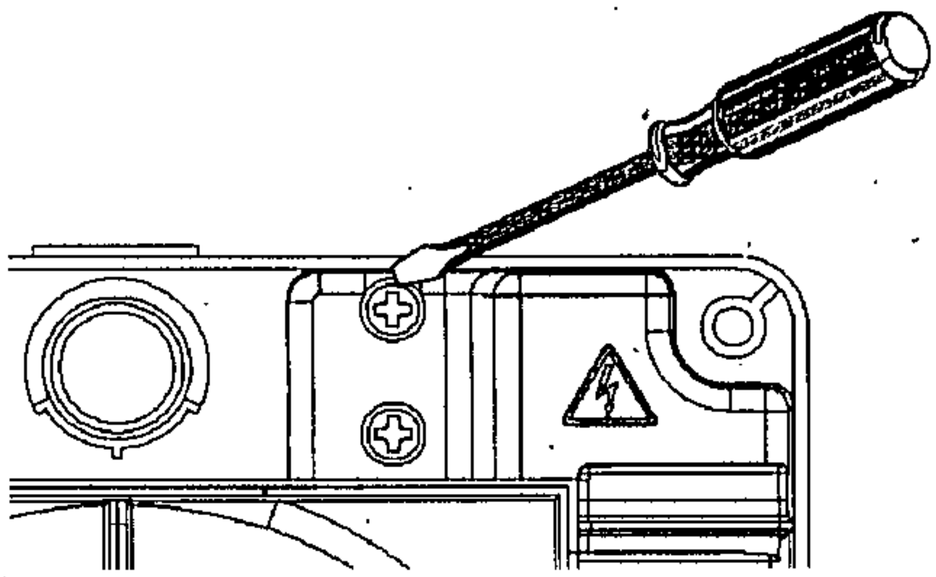

Fig.5

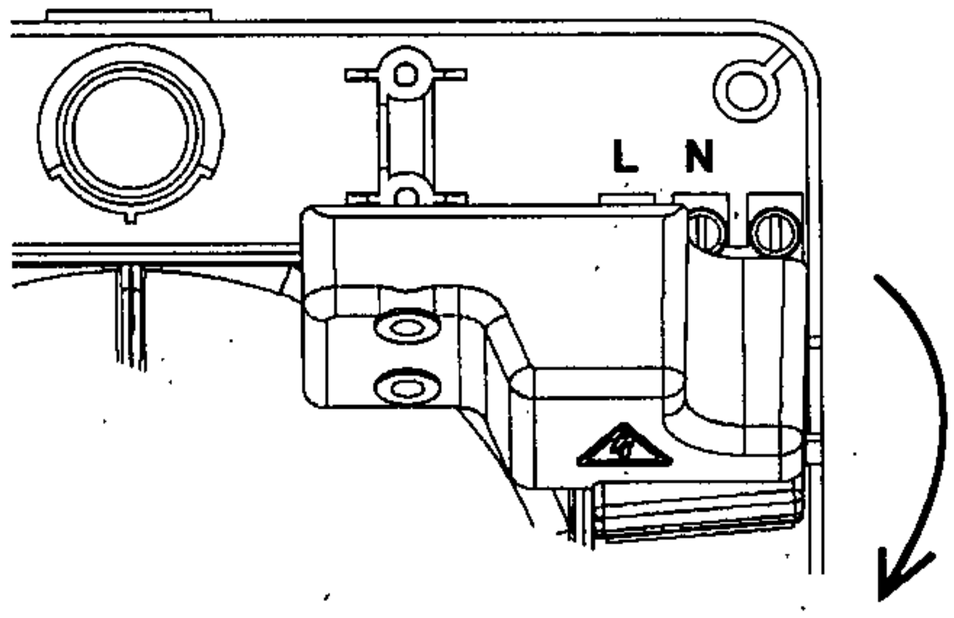

Fig.6

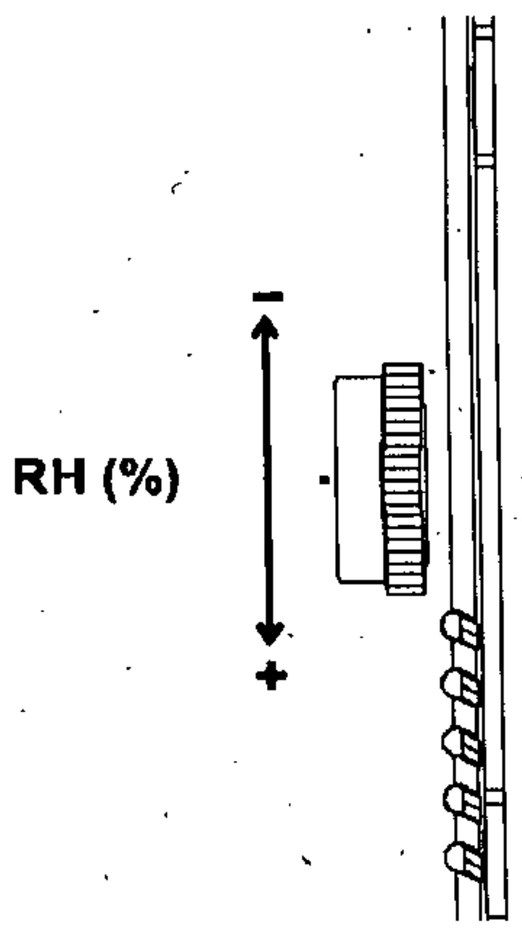

Fig.7

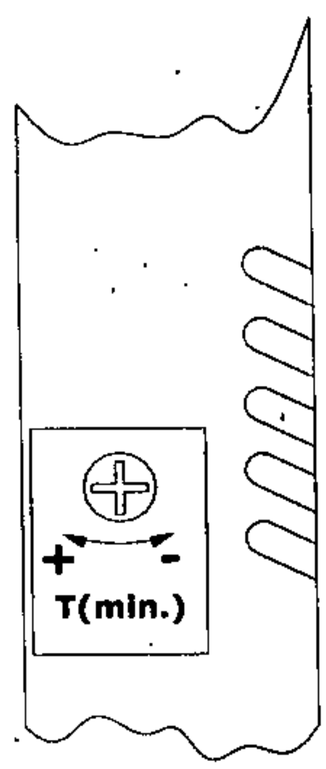

© Copyright Vent-Axia 2006

VENT-AXIA SALES CENTRES

ENGLAND & WALES NATIONAL CALL CENTRE
Newton Road, Crawley
West Sussex
RH10 9JA

Telephone: 01293 530202
Fax: 01293 565169

REPUBLIC OF IRELAND
Vent-Axia Ventilation Ltd
921 Western Road Industrial estate
Naas Road, Dublin 12

Telephone: (01) 450 4133
Fax: (01) 450 4570

Did you find these instructions easy to use?

We value your comments, contact us via : Email:info@vent-axia.com

The Vent-Axia Guarantee

Applicable only to products installed and used in the United Kingdom. For details of the Guarantee outside of the United Kingdom contact your local supplier.

Vent-Axia guarantees this product for two years from the date of purchase against faulty material or workmanship. In the event of any part being found to be defective, the product will be repaired, or at the Company's discretion the product will be replaced without charge, provided that the product:

1). Has been installed and used in accordance with the instruction given with each unit.
2). The electricity supply complies with the rating label.
3). Has not been misused, neglected or damaged.
4). Has not been modified or repaired by any person not authorised to do so by Vent-Axia.

IF CLAIMING UNDER THE TERMS OF THE GUARANTEE

Please return the complete product, carriage paid to your original supplier by post or in person. Please ensure that it is adequately packed and accompanied by a letter clearly marked 'Guarantee Claim' stating the nature of the fault and providing proof of the date and source of purchase.

As part of the policy of continuous product improvement Vent-Axia reserve the right to alter specifications without notice

428561C

0906

288234016

© Copyright Vent-Axia 2006

Recycled paper