Stelrad Accord Radiator Installation Instructions

Applications

We recommend that Stelrad Accord Radiators Installation Instructions be only used on indirect heating systems. The installation should be in accordance with BS5449 standard. When making soldered joints it is important to choose a flux that is readily soluble in water and kept to the minimum quantity of solder and flux and thoroughly flushed on completion.

Production specification

The Stelrad Accord Radiator consists of a grille, two side panels when compacted and individually packed radiator brackets with air vent, plug and plastic grommets. The brackets and hardware bag contained within the radiator are in the shrink wrap packaging.

Installation of radiator

Open pack and check contents. (Fig 1.) It is recommended on all radiator types that the wall brackets are fitted with the wide flange towards the wall. Measure and mark on fixing wall radiator bracket centres, ensure a minimum dimension of a 100mm clearance is kept at either side of finished radiator position. From the floor to the bottom edge of the bracket a dimension of 200mm should be used. This will give a correct distance from the floor to the base of radiator for heat output. Fit the plastic grommets in position on radiator brackets. Remove plastic transit plugs from the two radiator tappings and fit air vent and plug to the preferred top LH or RH radiator connections, PTFE is not required and care should be taken not to over tighten. Prepare radiator valve tails with PTFE tape and fit to bottom radiator connections. Position radiator to centre of radiator wall brackets, make radiator valve connections, vent from air bleed with heating system off, balance radiator with lockshield valve to ensure even heat of all system radiators. If fitting on plastic pipes, you may consider using an anti-lift attachement which is available on request from Stelrad.

NOTE: WHEN FILLING RADIATOR TURN OFF HEATING AND HOTWATER BOILER CONTROLS, SEALED SYSTEMS SHOULD BE REPRESSURISED TO THE CORRECT SYSTEM WORKING PRESSURE.

Potential Hazards / Precautionary Measures

Radiators: - *Manual Handling:* - Consult your employer's manual handling risk assessments before manually handling any radiators. Due to their bulk or weight, radiators may be difficult to lift - always test the load for weight and seek assistance when lifting heavy or bulky loads.
- *Safety:* - For your own safety it is recommended that you avoid placing your hands/fingers between and down the back of the radiator.

Packaging: - *Suffocation:* - Keep all packaging materials away from children.
- Ensure that all packaging materials are disposed of in a safe and environmentally friendly manner.

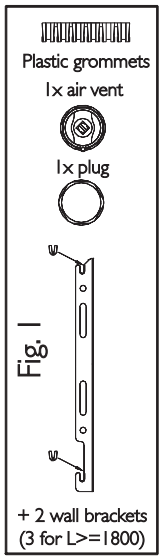

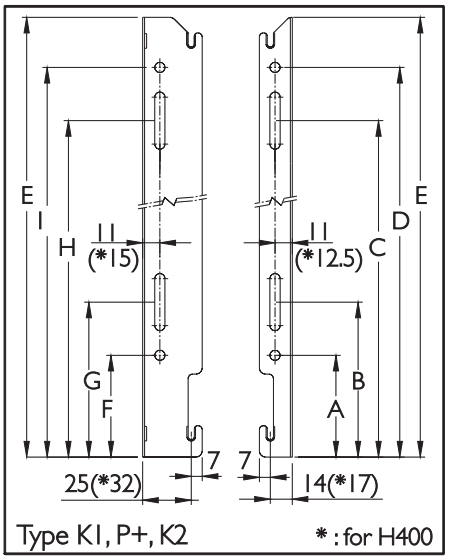

RAD. HEIGHT	450	600	700
A	65	65	65
B	99	99	99
C	269	419	519
D	303	453	553
E	335	485	585
F	65	65	65
G	99	99	99
H	269	419	519
I	303	453	553

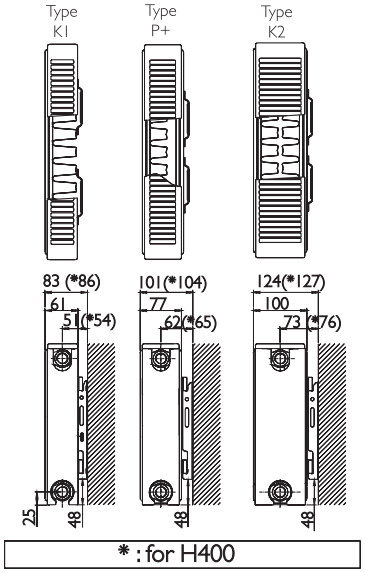

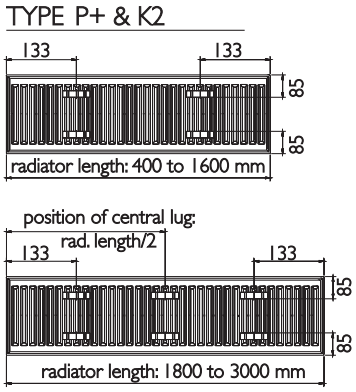

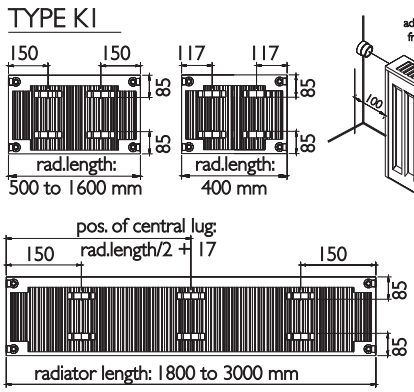

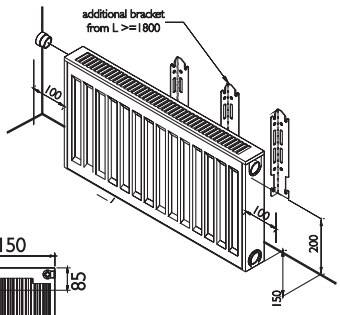

z4167-03