95444

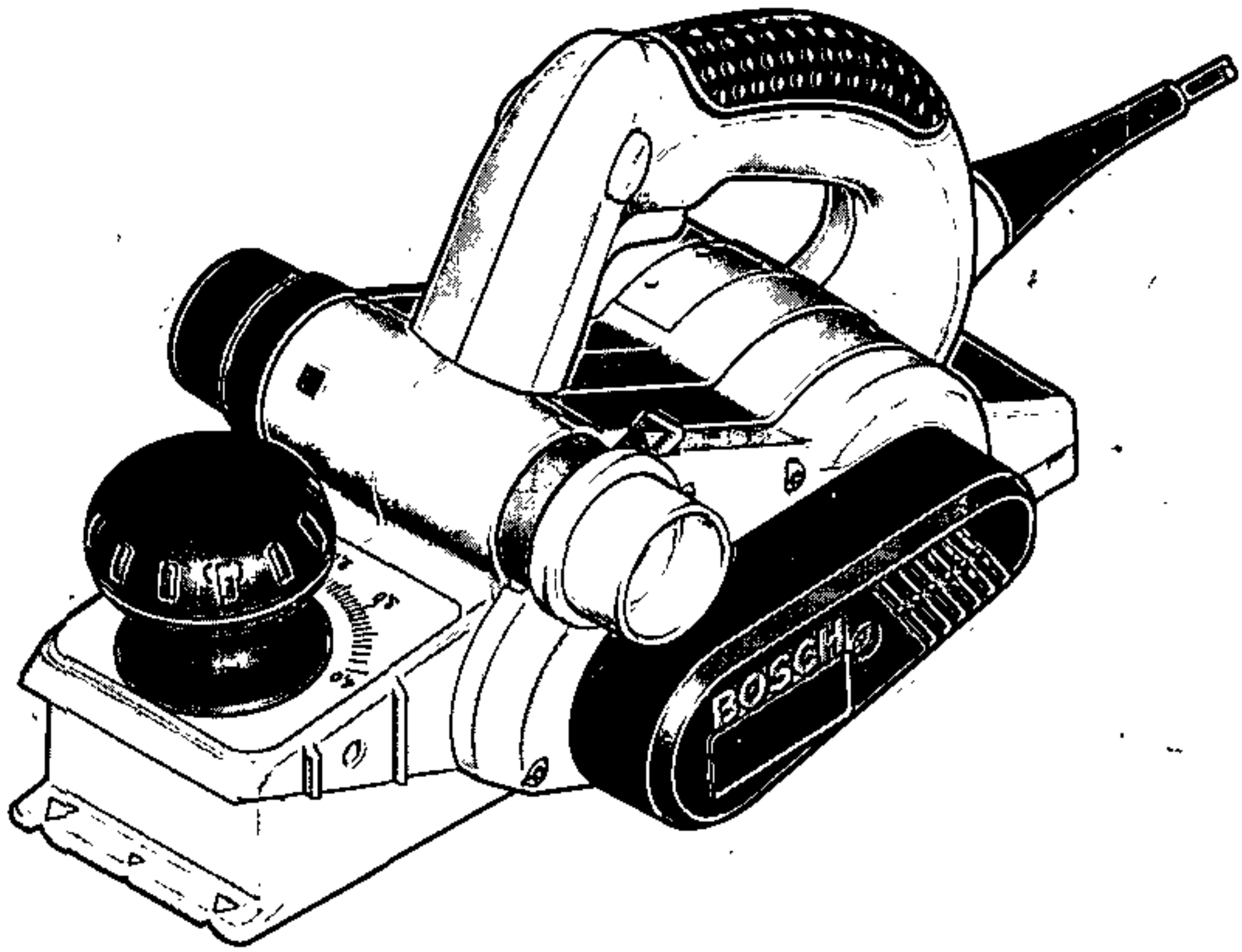

GHO 40-82 C Professional

de Originalbetriebsanleitung
en Original instructions
fr Notice originale
es Manual original
pt Manual original
it Istruzioni originali
nl Oorspronkelijke gebruiksaanwijzing
da Original brugsanvisning
sv Bruksanvisning i original
no Original driftsinstruks
fi Alkuperäiset ohjeet
el Πρωτότυπο οδηγιών χρήσης
tr Orijinal işletme talimatı

Allgemeine Sicherheitshinweise für Elektrowerkzeuge

⚠WARNUNG **Lesen Sie alle Sicherheitshinweise und Anweisungen.** Versäumnisse bei der Einhaltung der Sicherheitshinweise und Anweisungen können elektrischen Schlag, Brand und/oder schwere Verletzungen verursachen.

Bewahren Sie alle Sicherheitshinweise und Anweisungen für die Zukunft auf.

Der in den Sicherheitshinweisen verwendete Begriff „Elektrowerkzeug" bezieht sich auf netzbetriebene Elektrowerkzeuge (mit Netzkabel) und auf akkubetriebene Elektrowerkzeuge (ohne Netzkabel).

1) **Arbeitsplatzsicherheit**

   a) **Halten Sie Ihren Arbeitsbereich sauber und gut beleuchtet.** Unordnung oder unbeleuchtete Arbeitsbereiche können zu Unfällen führen.

   b) **Arbeiten Sie mit dem Elektrowerkzeug nicht in explosionsgefährdeter Umgebung, in der sich brennbare Flüssigkeiten, Gase oder Stäube befinden.** Elektrowerkzeuge erzeugen Funken, die den Staub oder die Dämpfe entzünden können.

   c) **Halten Sie Kinder und andere Personen während der Benutzung des Elektrowerkzeugs fern.** Bei Ablenkung können Sie die Kontrolle über das Gerät verlieren.

2) **Elektrische Sicherheit**

   a) **Der Anschlussstecker des Elektrowerkzeuges muss in die Steckdose passen. Der Stecker darf in keiner Weise verändert werden. Verwenden Sie keine Adapterstecker gemeinsam mit schutzgeerdeten Elektrowerkzeugen.** Unveränderte Stecker und passende Steckdosen verringern das Risiko eines elektrischen Schlages.

   b) **Vermeiden Sie Körperkontakt mit geerdeten Oberflächen wie von Rohren, Heizungen, Herden und Kühlschränken.** Es besteht ein erhöhtes Risiko durch elektrischen Schlag, wenn Ihr Körper geerdet ist.

   c) **Halten Sie Elektrowerkzeuge von Regen oder Nässe fern.** Das Eindringen von Wasser in ein Elektrowerkzeug erhöht das Risiko eines elektrischen Schlages.

   d) **Zweckentfremden Sie das Kabel nicht, um das Elektrowerkzeug zu tragen, aufzuhängen oder um den Stecker aus der Steckdose zu ziehen. Halten Sie das Kabel fern von Hitze, Öl, scharfen Kanten oder sich bewegenden Geräteteilen.** Beschädigte oder verwickelte Kabel erhöhen das Risiko eines elektrischen Schlages.

   e) **Wenn Sie mit einem Elektrowerkzeug im Freien arbeiten, verwenden Sie nur Verlängerungskabel, die auch für den Außenbereich geeignet sind.** Die Anwendung eines für den Außenbereich geeigneten Verlängerungskabels verringert das Risiko eines elektrischen Schlages.

   f) **Wenn der Betrieb des Elektrowerkzeuges in feuchter Umgebung nicht vermeidbar ist, verwenden Sie einen Fehlerstromschutzschalter.** Der Einsatz eines Fehlerstromschutzschalters vermindert das Risiko eines elektrischen Schlages.

3) **Sicherheit von Personen**

   a) **Seien Sie aufmerksam, achten Sie darauf, was Sie tun, und gehen Sie mit Vernunft an die Arbeit mit einem Elektrowerkzeug. Benutzen Sie kein Elektrowerkzeug, wenn Sie müde sind oder unter dem Einfluss von Drogen, Alkohol oder Medikamenten stehen.** Ein Moment der Unachtsamkeit beim Gebrauch des Elektrowerkzeuges kann zu ernsthaften Verletzungen führen.

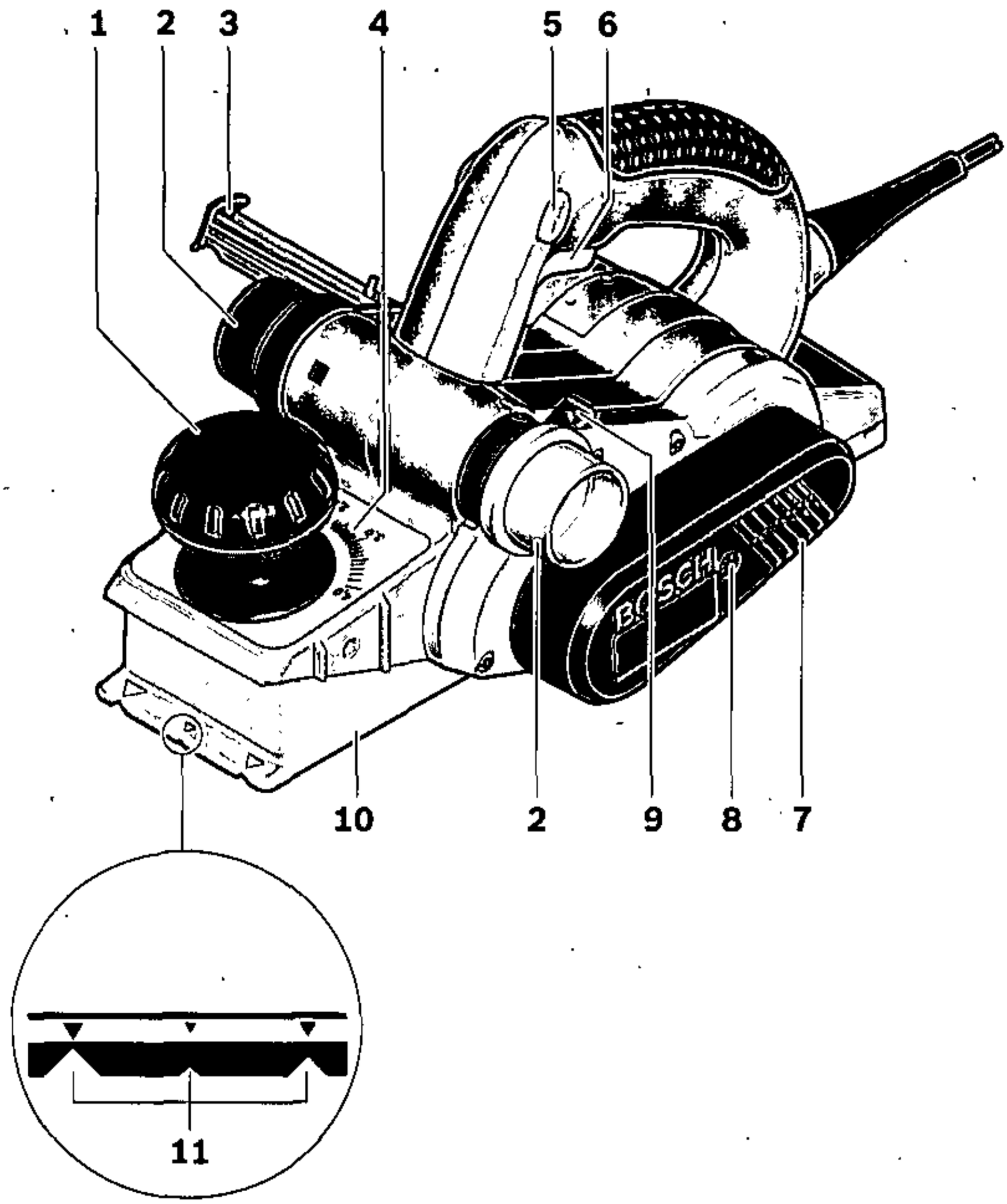

GHO 40-82 C
Professional

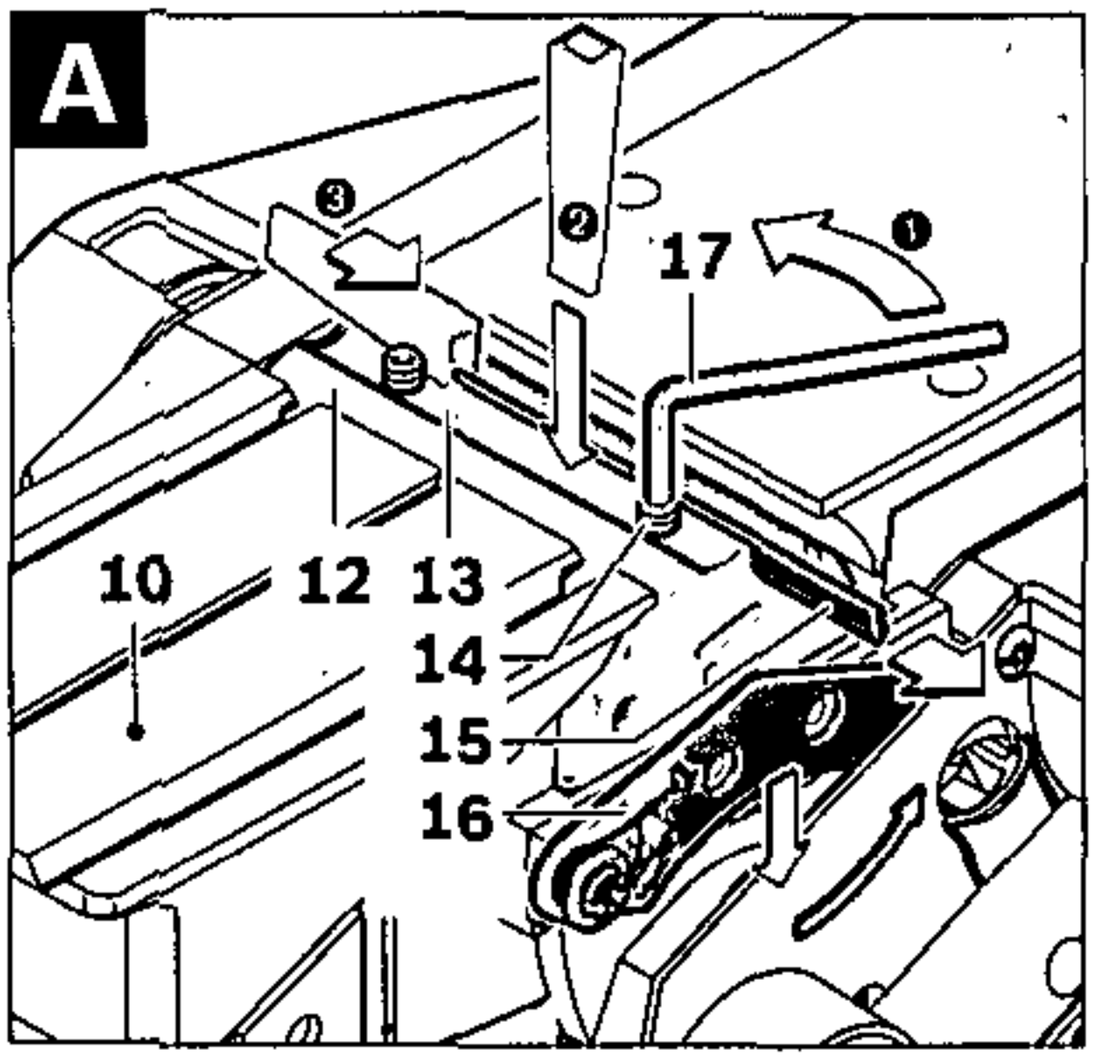
A
❸
❷
17
❶
10
12
13
14
15
16

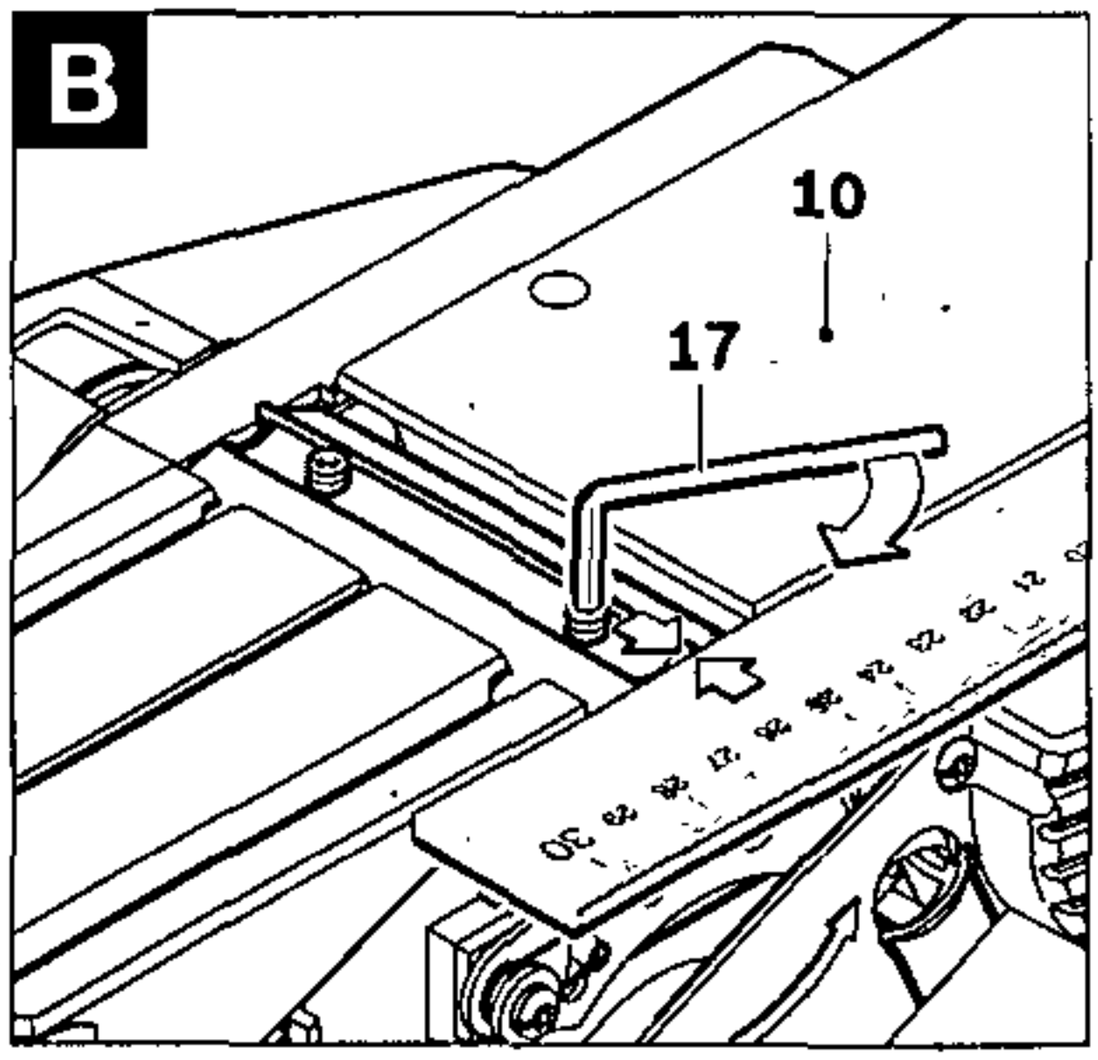
B
10
17

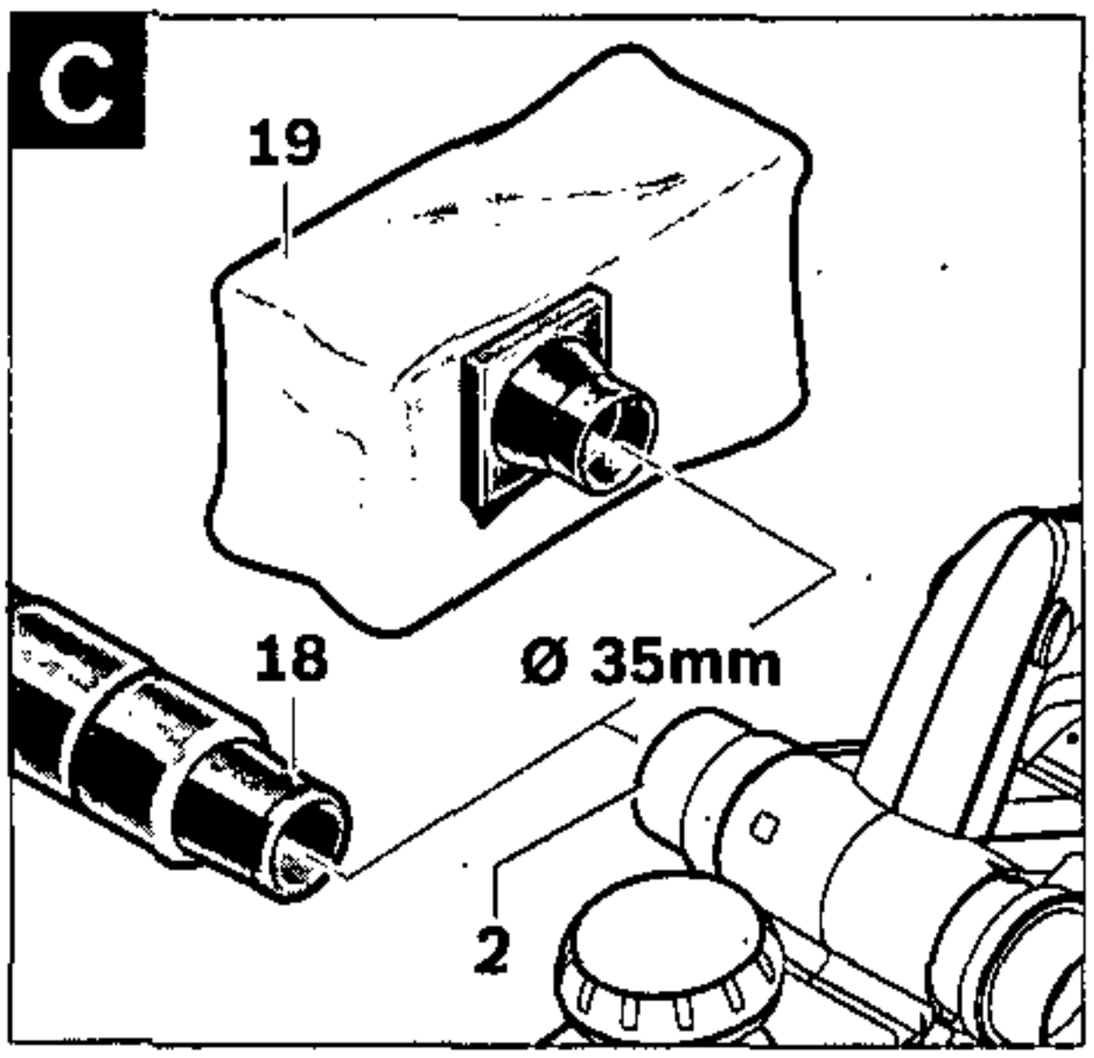
C
19
18
Ø 35mm
2

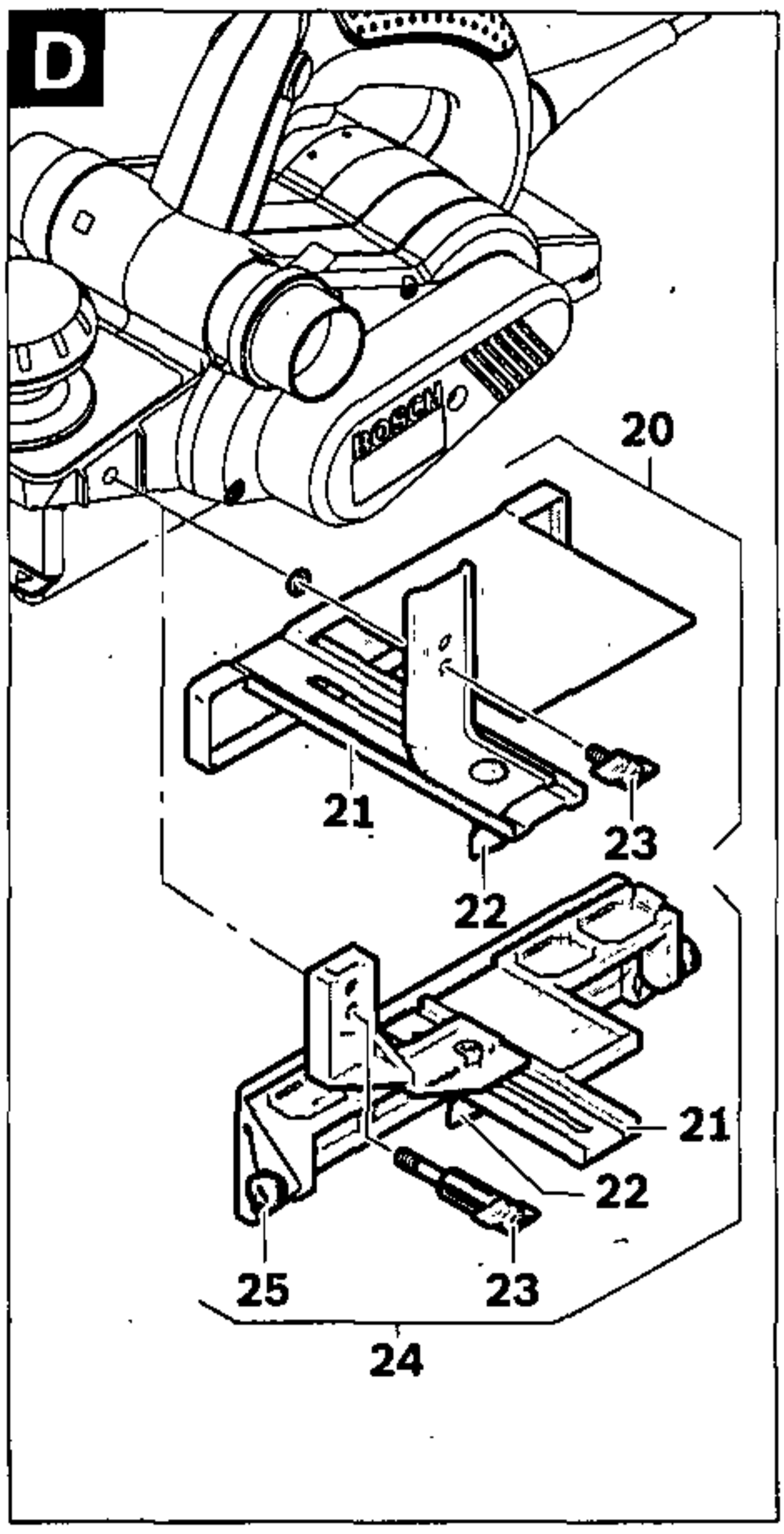
D
BOSCH
20
21
23
22
21
22
25
23
24

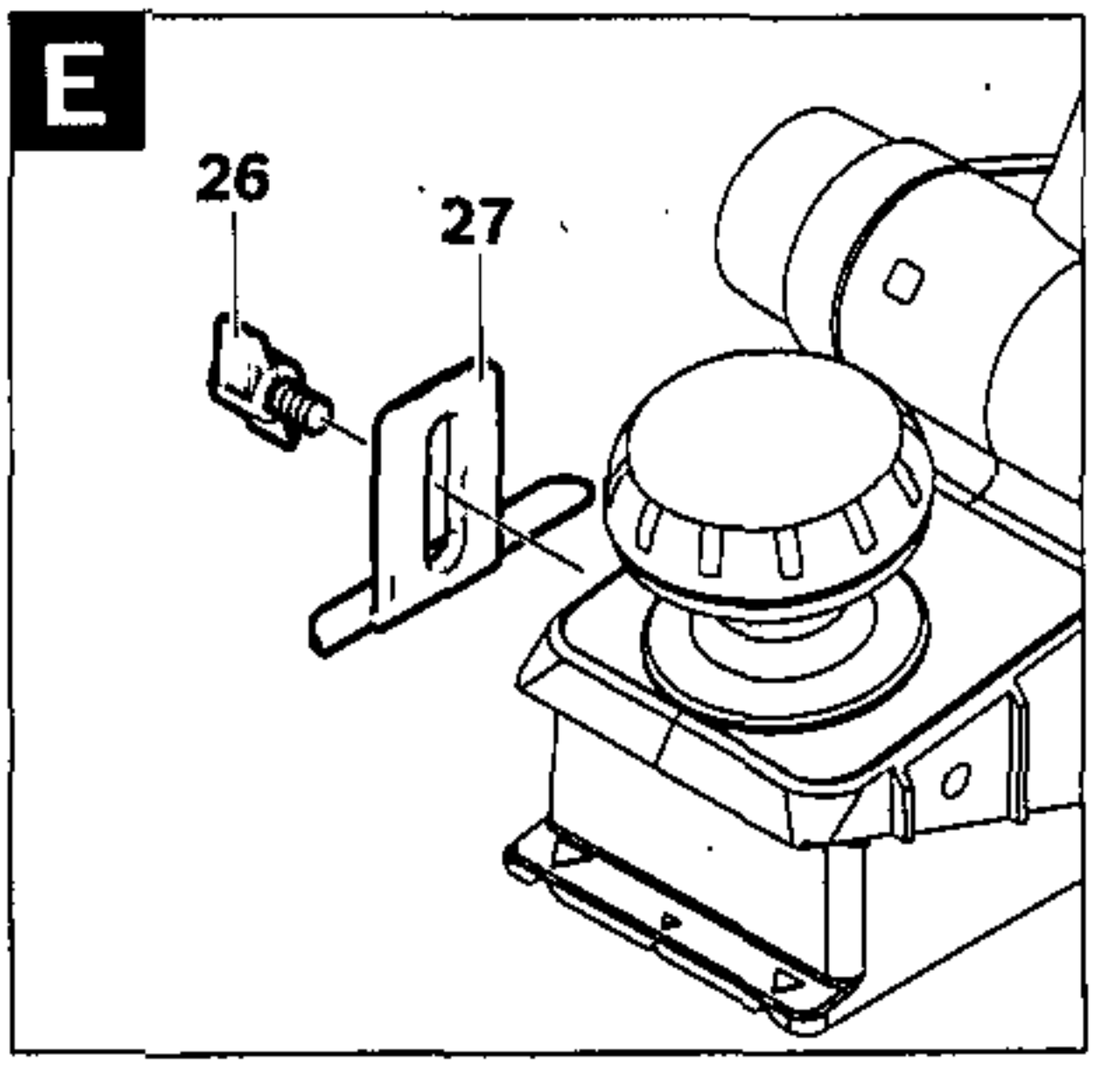
E
26
27

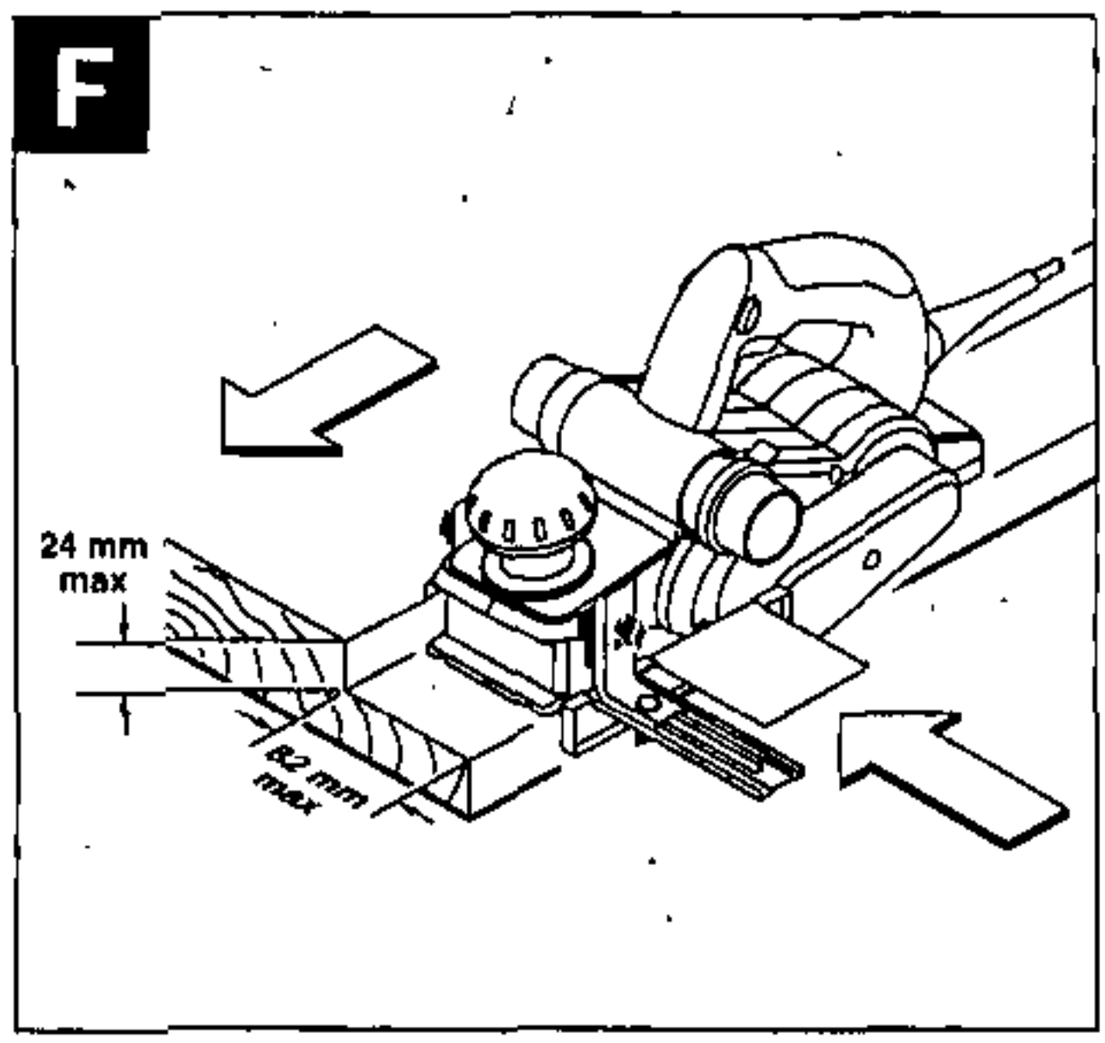
F
24 mm
max
82 mm
max

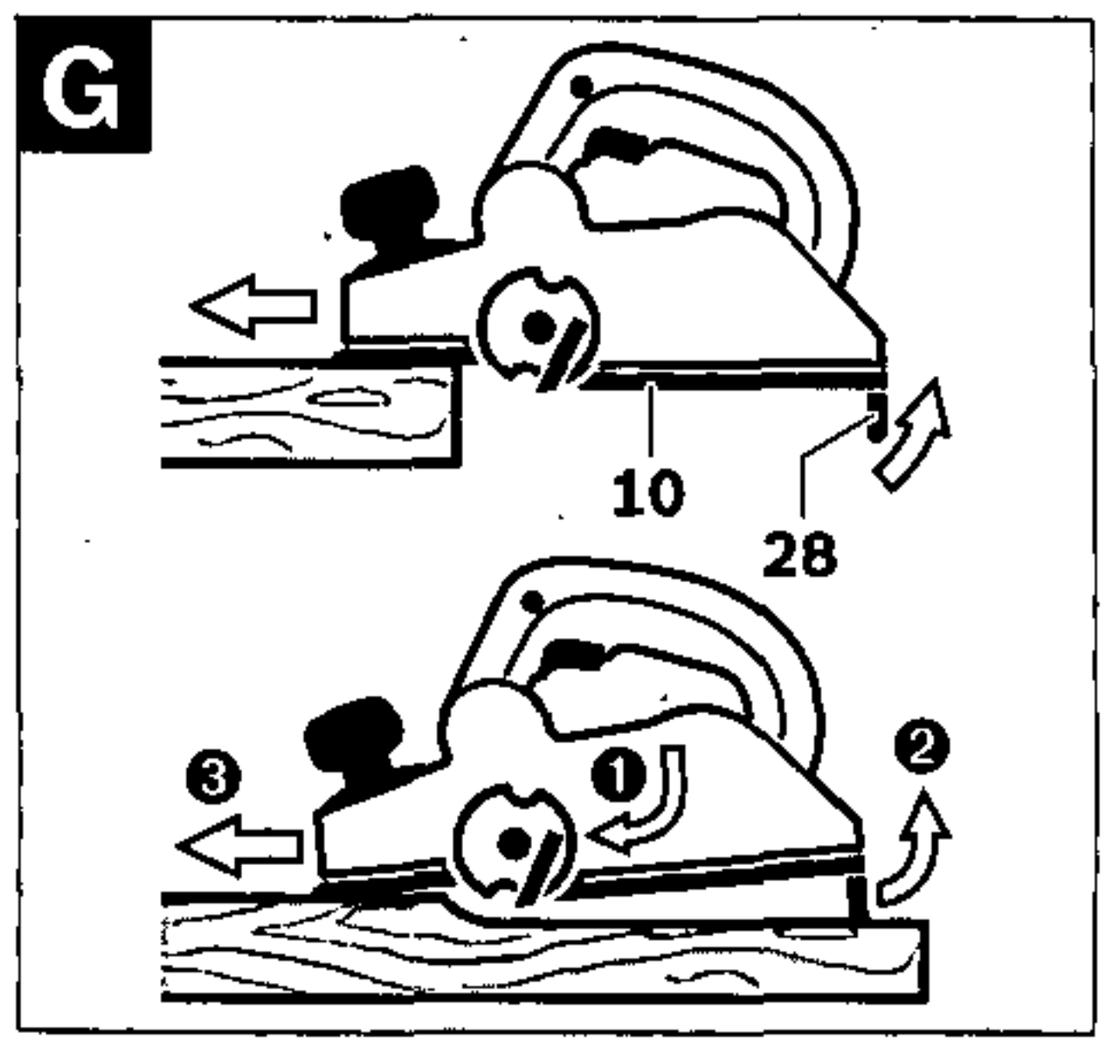
G
10
28
3
1
2

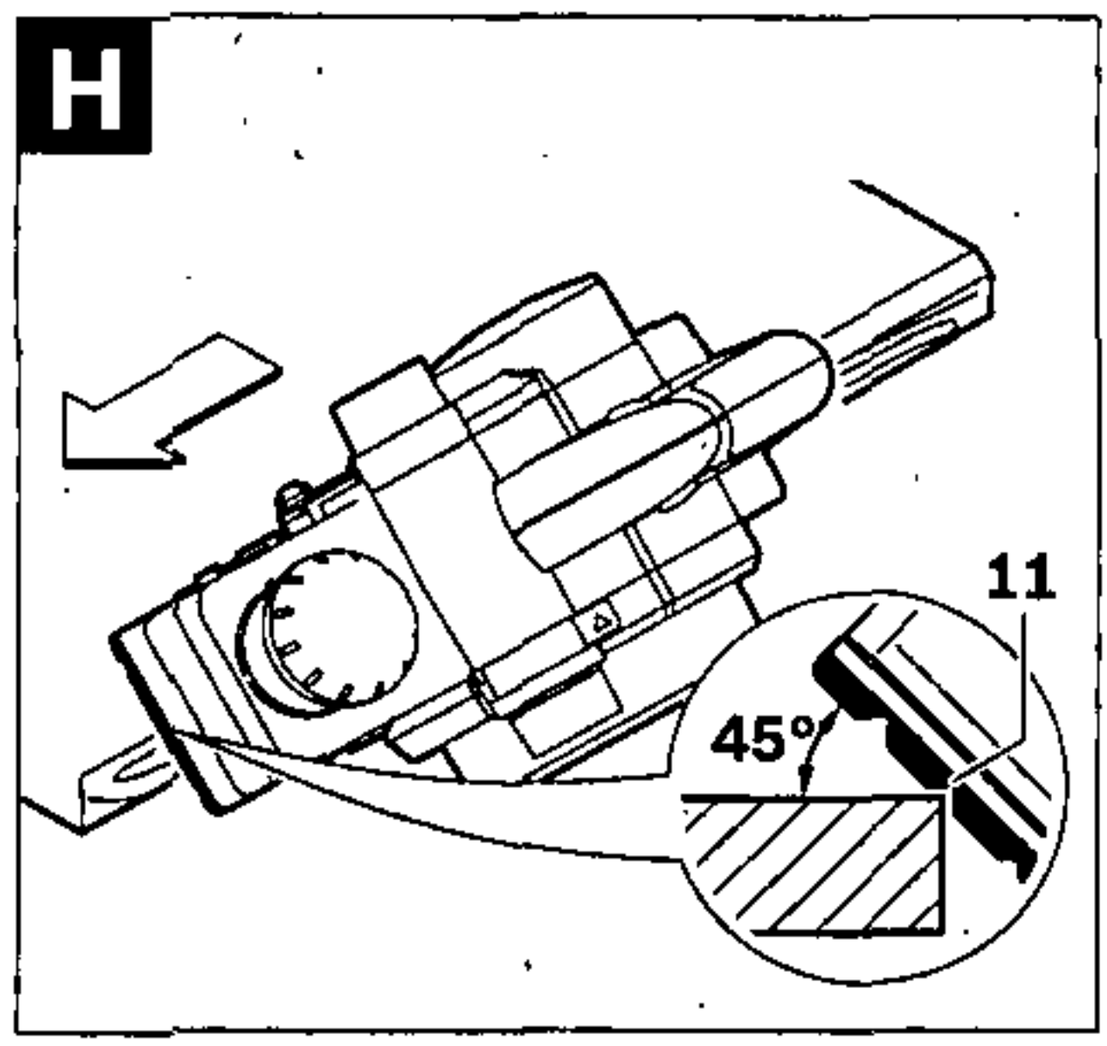
H
11
45°

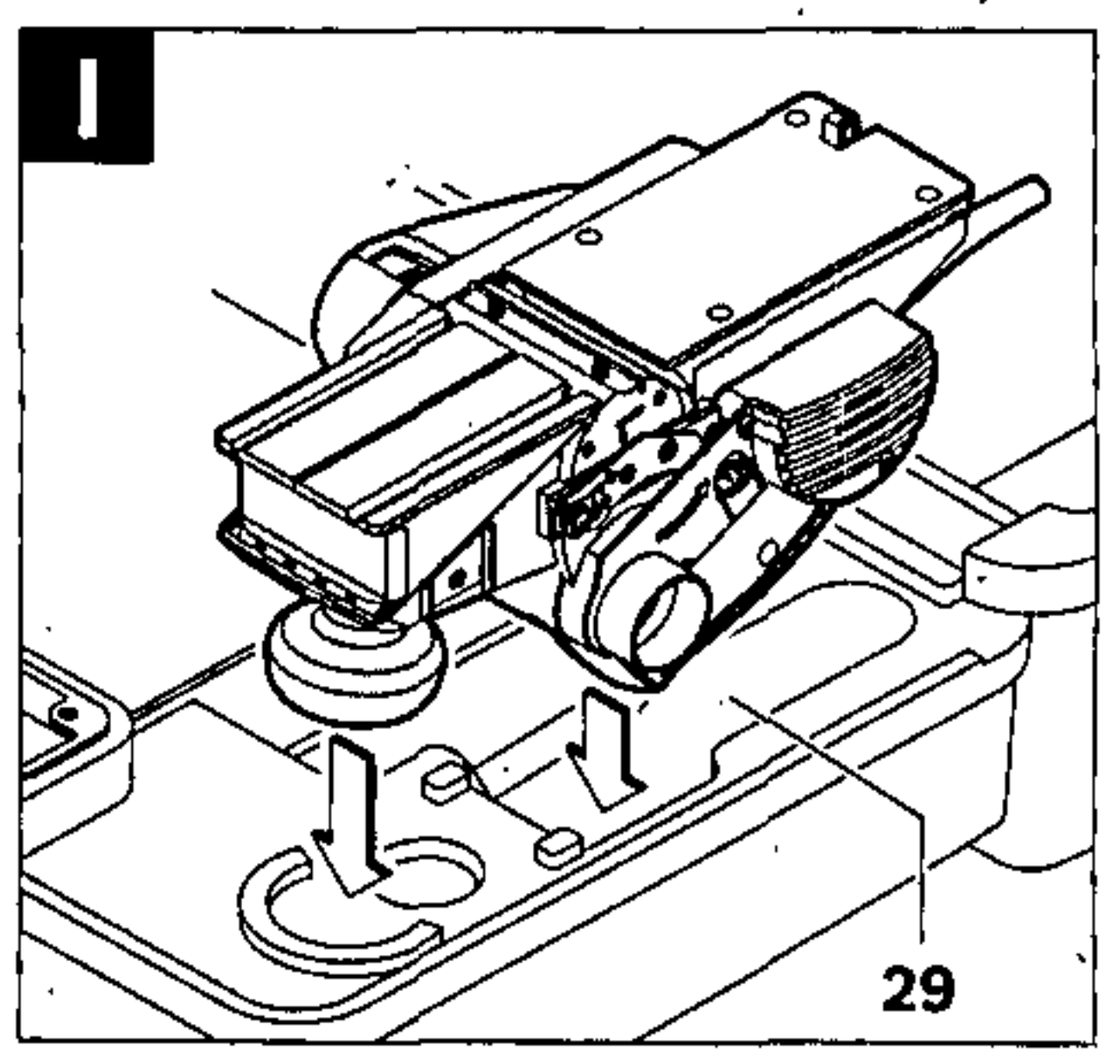
I
29

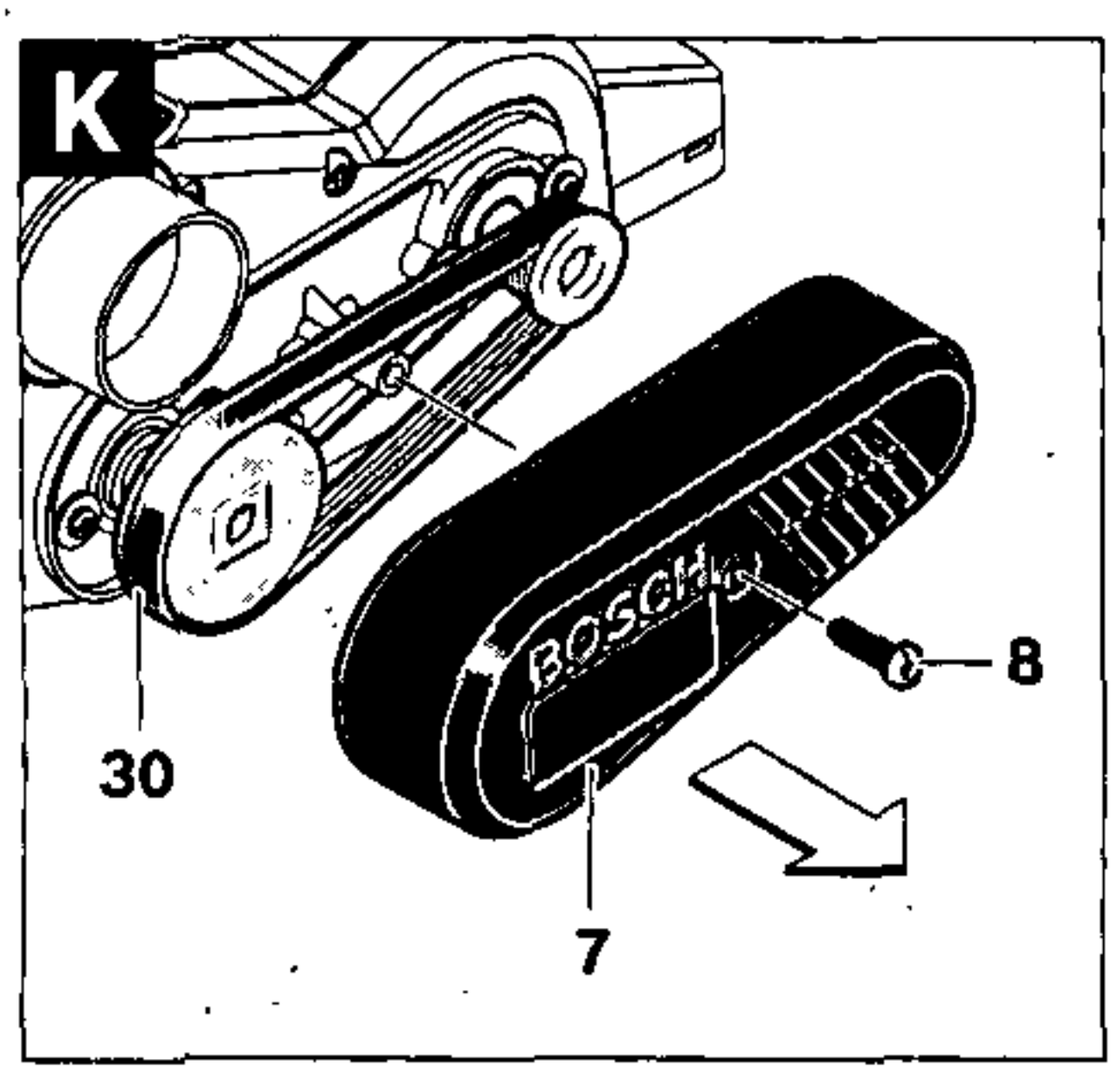
K
BOSCH
8
30
7

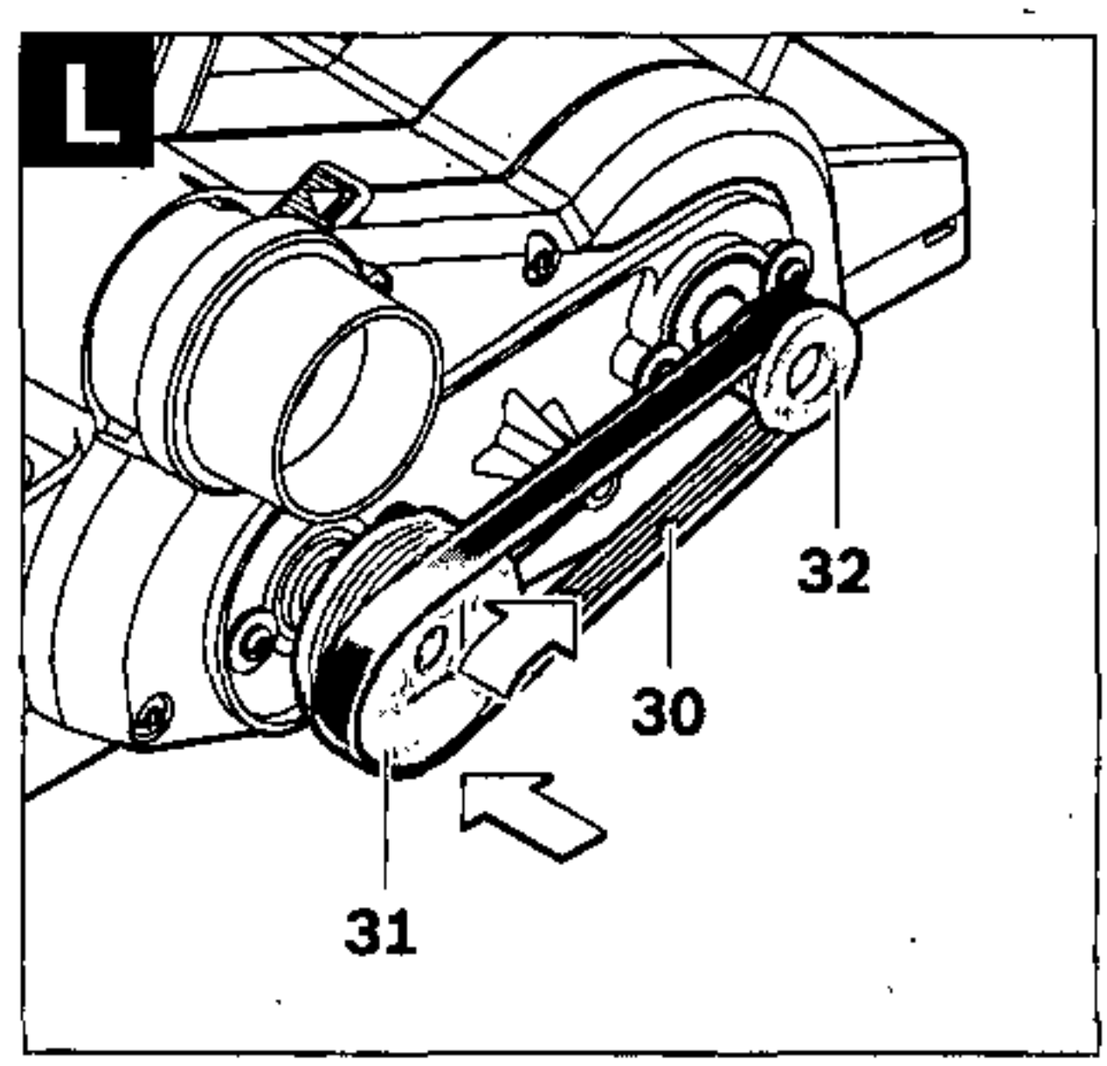
L
32
30
31

Deutsch . . . . . Seite 6
English . . . . . Page 15
Français . . . . . Page 23
Español. . . . . Página 31
Português . . . . . Página 40
Italiano . . . . . Pagina 48
Nederlands . . . . . Pagina 57
Dansk . . . . . Side 65
Svenska . . . . . Sida 72
Norsk . . . . . Side 79
Suomi . . . . . Sivu 86
Ελληνικά . . . . . Σελίδα 93
Türkçe . . . . . Sayfa 102

GHO 40-82 C + ADV 82

0 601 59A ... **0 603 095 000**

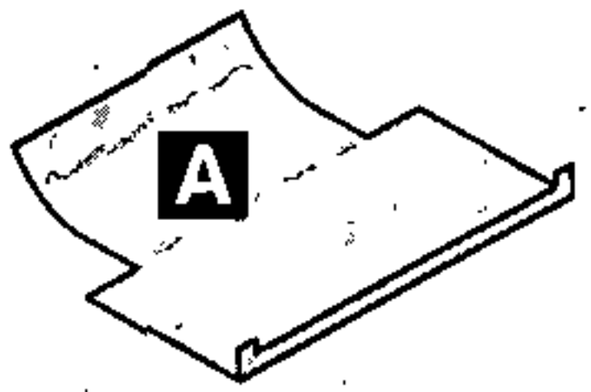

2 601 290 010

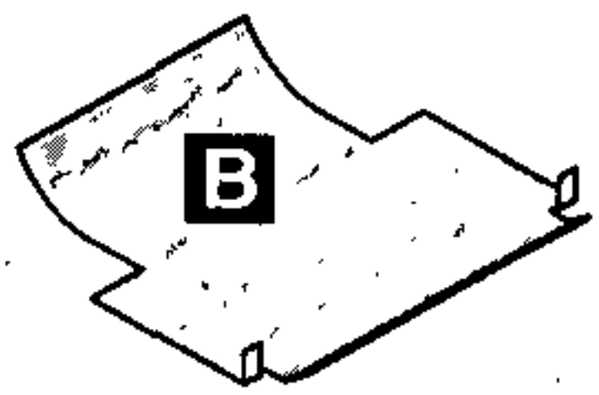

2 601 290 029

Deutsch

Falls Sie im Besitz einer Abricht- und Dickenhobelvorrichtung ADV 82 (0 603 095 000) sind, bei der das Druckblech **A** montiert ist, muss dieses zur Verwendung mit dem GHO 40-82 C (0 601 59A ...) ausgetauscht werden.

Bitte senden Sie dazu den ADV 82 zum kostenlosen Einbau des Druckbleches **B** an die für Ihr Land nachfolgend aufgeführte Kundendienststelle.

Hinweis für den Kundendienst: Siehe Service-Info 216.

Deutschland

Robert Bosch GmbH
Servicezentrum Elektrowerkzeuge
Zur Luhne 2
37589 Kalefeld

✆ Service: ..... 01 80 - 3 35 54 99

Fax: ..... +49 (0) 55 53 / 20 22 37

✆ Kundenberater: ..... 01 80 - 3 33 57 99

Österreich

ABE Service GmbH
Jochen-Rindt-Straße 1
1232 Wien

✆ Service: ..... +43 (0)1 / 61 03 80

Fax: ..... +43 (0)1 / 61 03 84 91

✆ Kundenberater: +43 (0)1 / 797 22 3066

E-Mail: abe@abe-service.co.at

Schweiz

✆ Service: ..... +41 (0)1 / 8 47 16 16

Fax: ..... +41 (0)1 / 8 47 16 57

✆ Kundenberater 0 800 55 11 55

English

If you are in possession of an ADV 82 planer/thicknesser attachment (0 603 095 000) that has the pressure plate **A** mounted, then it must be exchanged in order to be used with the GHO 40-82 C (0 601 59A ...).

For free installation of the pressure plate **B**, please send the ADV 82 to the after-sales service agent for your country as listed in the following.

Note for the after-sales service agent: See Service Info 216.

Great Britain

Robert Bosch Ltd. (B.S.C.)
P.O. Box 98
Broadwater Park
North Orbital Road
Denham-Uxbridge
Middlesex UB 9 5HJ

✆ Service ..... +44 (0) 18 95 / 83 87 82

✆ Advice line ..... +44 (0) 18 95 / 83 87 91

Fax ..... +44 (0) 18 95 / 83 87 89

Ireland

Beaver Distribution Ltd.
Greenhills Road
Tallaght-Dublin 24
✆ Service ..... +353 (0)1 / 414 9400
Fax ..... +353 (0)1 / 459 8030

Australia

Robert Bosch Australia L.t.d.
RBAU/SPT2
1555 Centre Road
P.O. Box 66 Clayton
3168 Clayton/Victoria
✆ ..... +61 (0)1 / 800 804 777
Fax ..... +61 (0)1 / 800 819 520
www.bosch.com.au
E-Mail:
CustomerSupportSPT@au.bosch.com

New Zealand

Robert Bosch Limited
14-16 Constellation Drive
Mairangi Bay
Auckland
New Zealand
✆ ..... +64 (0)9 / 47 86 158
Fax ..... +64 (0)9 / 47 82 914

Français

Si vous êtes en possession d'un appareil de dégauchissement-rabotement en épaisseur ADV 82 (0 603 095 000), sur laquelle la tôle de pression **A** est montée, celle-ci doit doit être échangée pour l'utilisation avec le GHO 40-82 C (0 601 59A ...).

Pour cela, veuillez envoyer l'ADV 82 à votre service après-vente indiqué ci-dessous pour votre pays pour faire monter gratuitement la tôle de pression **B**.

Remarque pour le service après-vente: Cf. service-Info 216.

France

Information par Minitel 11
Nom : Bosch Outillage
Loc : Saint Ouen
Dépt : 93

Robert Bosch France S.A.
Service Après-vente/Outillage
B.P. 67-50, Rue Ardoin
93402 St. Ouen Cedex
✆ Service conseil client..... 0143 11 9002
Numéro Vert 0 800 05 50 51

Belgique

✆ ..... +32 (0)2 / 525 51 43
Fax ..... +32 (0)2 / 525 54 20
E-Mail :
Outillage.Gereedschappen@be.bosch.com

Suisse

✆ ..... +41 (0)1 / 8 47 16 16
Fax ..... +41 (0)1 / 8 47 16 57
✆ Service conseil client 0 800 55 11 55

Español

Si dispone de un dispositivo de cepillar y regruesar ADV 82 (0 603 095 000) en el que se encuentre montado la chapa de apriete **A**, es necesario sustituirla para poder utilizar el dispositivo con el GHO 40-82 C (0 601 59A ...).

Para ello, rogamos envíen el ADV 82 al servicio técnico de su país, que a continuación se indica, para que le monte sin coste la chapa de apriete **B**.

Nota para el servicio técnico: ver información de servicio 216.

España

Robert Bosch España, S.A.
Departamento de ventas
Herramientas Eléctricas
C/Hermanos García Noblejas, 19
28037 Madrid
✆ Asesoramiento
al cliente ..... +34 901 11 66 97
Fax ..... +34 91 327 98 63

Venezuela

Robert Bosch S.A.
Final Calle Vargas. Edf.
Centro Berimer P.B.
Boleita Norte
Caracas 107
✆ ..... +58 (0)2 / 207 45 11

México

Robert Bosch S.A. de C.V.
✆ Interior:..... +52 (0)1 / 800 627 1286
✆ D.F.:..... +52 (0)1 / 52 84 30 62
E-Mail: arturo.fernandez@mx.bosch.com

General Power Tool Safety Warnings

⚠WARNING **Read all safety warnings and all instructions.** Failure to follow the warnings and instructions may result in electric shock, fire and/or serious injury.

Save all warnings and instructions for future reference.

The term "power tool" in the warnings refers to your mains-operated (corded) power tool or battery-operated (cordless) power tool.

1) **Work area safety**

   a) **Keep work area clean and well lit.** Cluttered or dark areas invite accidents.

   b) **Do not operate power tools in explosive atmospheres, such as in the presence of flammable liquids, gases or dust.** Power tools create sparks which may ignite the dust or fumes.

   c) **Keep children and bystanders away while operating a power tool.** Distractions can cause you to lose control.

2) **Electrical safety**

   a) **Power tool plugs must match the outlet. Never modify the plug in any way. Do not use any adapter plugs with earthed (grounded) power tools.** Unmodified plugs and matching outlets will reduce risk of electric shock.

   b) **Avoid body contact with earthed or grounded surfaces, such as pipes, radiators, ranges and refrigerators.** There is an increased risk of electric shock if your body is earthed or grounded.

   c) **Do not expose power tools to rain or wet conditions.** Water entering a power tool will increase the risk of electric shock.

   d) **Do not abuse the cord. Never use the cord for carrying, pulling or unplugging the power tool. Keep cord away from heat, oil, sharp edges and moving parts.** Damaged or entangled cords increase the risk of electric shock.

   e) **When operating a power tool outdoors, use an extension cord suitable for outdoor use.** Use of a cord suitable for outdoor use reduces the risk of electric shock.

   f) **If operating a power tool in a damp location is unavoidable, use a residual current device (RCD) protected supply.** Use of an RCD reduces the risk of electric shock.

3) **Personal safety**

   a) **Stay alert, watch what you are doing and use common sense when operating a power tool. Do not use a power tool while you are tired or under the influence of drugs, alcohol or medication.** A moment of inattention while operating power tools may result in serious personal injury.

   b) **Use personal protective equipment. Always wear eye protection.** Protective equipment such as dust mask, non-skid safety shoes, hard hat, or hearing protection used for appropriate conditions will reduce personal injuries.

   c) **Prevent unintentional starting. Ensure the switch is in the off-position before connecting to power source and/or battery pack, picking up or carrying the tool.** Carrying power tools with your finger on the switch or energising power tools that have the switch on invites accidents.

   d) **Remove any adjusting key or wrench before turning the power tool on.** A wrench or a key left attached to a rotating part of the power tool may result in personal injury.

   e) **Do not overreach. Keep proper footing and balance at all times.** This enables better control of the power tool in unexpected situations.

   f) **Dress properly. Do not wear loose clothing or jewellery. Keep your hair, clothing and gloves away from moving parts.** Loose clothes, jewellery or long hair can be caught in moving parts.

   g) **If devices are provided for the connection of dust extraction and collection facilities, ensure these are connected and properly used.** Use of dust collection can reduce dust-related hazards.

4) **Power tool use and care**

a) **Do not force the power tool. Use the correct power tool for your application.** The correct power tool will do the job better and safer at the rate for which it was designed.

b) **Do not use the power tool if the switch does not turn it on and off.** Any power tool that cannot be controlled with the switch is dangerous and must be repaired.

c) **Disconnect the plug from the power source and/or the battery pack from the power tool before making any adjustments, changing accessories, or storing power tools.** Such preventive safety measures reduce the risk of starting the power tool accidentally.

d) **Store idle power tools out of the reach of children and do not allow persons unfamiliar with the power tool or these instructions to operate the power tool.** Power tools are dangerous in the hands of untrained users.

e) **Maintain power tools. Check for misalignment or binding of moving parts, breakage of parts and any other condition that may affect the power tool's operation. If damaged, have the power tool repaired before use.** Many accidents are caused by poorly maintained power tools.

f) **Keep cutting tools sharp and clean.** Properly maintained cutting tools with sharp cutting edges are less likely to bind and are easier to control.

g) **Use the power tool, accessories and tool bits etc. in accordance with these instructions, taking into account the working conditions and the work to be performed.** Use of the power tool for operations different from those intended could result in a hazardous situation.

5) **Service**

a) **Have your power tool serviced by a qualified repair person using only identical replacement parts.** This will ensure that the safety of the power tool is maintained.

Machine-specific Safety Warnings

- **Wait for the cutter to stop before setting the tool down.** An exposed cutter may engage the surface leading to possible loss of control and serious injury.
- **Do not reach into the saw dust ejector with your hands.** They could be injured by rotating parts.
- **Apply the machine to the workpiece only when switched on.** Otherwise there is danger of kickback when the cutting tool jams in the workpiece.
- **When working, always hold the planer in such a manner that the planer base plate faces flat on the workpiece.** Otherwise the planer can become wedged and lead to injuries.
- **Never plane over metal objects, nails or screws.** The planer blade and the blade shaft can become damaged and lead to increased vibrations.
- **Secure the workpiece.** A workpiece clamped with clamping devices or in a vice is held more secure than by hand.
- **Never use the machine with a damaged cable. Do not touch the damaged cable and pull the mains plug when the cable is damaged while working.** Damaged cables increase the risk of an electric shock.

Functional Description

Read all safety warnings and all instructions. Failure to follow the warnings and instructions may result in electric shock, fire and/or serious injury.

While reading the operating instructions, unfold the graphics page for the machine and leave it open.

Intended Use

The machine is intended for planing of firmly supported wooden materials, such as beams and boards. It is also suitable for beveling edges and rebating.

Product Features

The numbering of the product features refers to the illustration of the machine on the graphics page.

1 Depth adjustment knob
2 Chip ejector (alternatively right/left)
3 Storage compartment for planer blade/ Allen key
4 Planing depth scale
5 Safety switch for On/Off switching
6 On/Off switch
7 Belt cover
8 Screw for belt cover
9 Chip ejection selector lever
10 Planer base plate
11 V-grooves
12 Blade drum
13 Clamping element for blade
14 Fastening screw for planer blade
15 Carbide blade (TC)
16 Lateral blade-shaft protector
17 Allen key
18 Extraction hose (Ø 35 mm)*
19 Chip/dust bag*
20 Parallel guide*
21 Scale for rebating width
22 Locking nut for adjustment of rebating width
23 Fastening bolt for parallel and beveling guide
24 Angle stop*
25 Locking nut for angle adjustment
26 Fastening bolt for rebating depth stop
27 Rebating depth stop*
28 Park rest
29 Service station*
30 Drive belt
31 Large pulley
32 Small pulley

***The accessories illustrated or described are not included as standard delivery.**

Technical Data

Planer		GHO 40-82 C Professional
Article number		0 601 59A ...
Rated power input	W	850
Output power	W	450
No-load speed	rpm	14000
Planing depth	mm	0 – 4.0
Rebating depth	mm	0 – 24
Planing width, max.	mm	82
Weight according to EPTA-Procedure 01/2003	kg	3.2
Protection class		⧈/II

The values given are valid for nominal voltages [U] of 230/240 V. For lower voltage and models for specific countries, these values can vary.

Please observe the article number on the type plate of your machine. The trade names of the individual machines may vary.

Noise/Vibration Information

Measured values determined according to EN 60745.

Typically the A-weighted noise levels of the product are: Sound pressure level 85 dB(A); Sound power level 96 dB(A). Uncertainty K = 3 dB.

Wear hearing protection!

Vibration total values (triax vector sum) determined according to EN 60745:

Vibration emission value a_h = 5.5 m/s^2, Uncertainty K = 1.5 m/s^2.

The vibration emission level given in this information sheet has been measured in accordance with a standardised test given in EN 60745 and may be used to compare one tool with another. It may be used for a preliminary assessment of exposure.

The declared vibration emission level represents the main applications of the tool. However if the tool is used for different applications, with different accessories or poorly maintained, the vibration emission may differ. This may significantly increase the exposure level over the total working period.

An estimation of the level of exposure to vibration should also take into account the times when the tool is switched off or when it is running but not actually doing the job. This may significantly reduce the exposure level over the total working period.
Identify additional safety measures to protect the operator from the effects of vibration such as: maintain the tool and the accessories, keep the hands warm, organisation of work patterns.

Declaration of Conformity CE

We declare under our sole responsibility that the product described under "Technical Data" is in conformity with the following standards or standardization documents: EN 60745 according to the provisions of the directives 2004/108/EC, 98/37/EC (until Dec. 28, 2009), 2006/42/EC (from Dec. 29, 2009 on).

Technical file at:
Robert Bosch GmbH, PT/ESC,
D-70745 Leinfelden-Echterdingen

Dr. Egbert Schneider	Dr. Eckerhard Strötgen
Senior Vice President	Head of Product
Engineering	Certification

ppa. i.V.

07.12.2007, Robert Bosch GmbH, Power Tools Division
D-70745 Leinfelden-Echterdingen

Assembly

- **Before any work on the machine itself, pull the mains plug.**

Changing the Tool

- **Be cautious when replacing the planer blades. Do not grasp the planer blades by the cutting edges.** Possible danger of injury due to the sharp cutting edges of the planer blades.

Use only original Bosch carbide blades (TC).

The carbide blade (TC) has 2 cutting edges and can be reversed. When both cutting edges are dull, the planer blade **15** must be replaced. The carbide blade (TC) may not be resharpened.

Disassembling the Planer Blade(s) (see figure A)

To reverse or replace the planer blade **15**, rotate the blade drum **12** until it is parallel to the planer base plate **10**.

❶ Loosen the two fastening screws **14** with the Allen key **17** by approx. 1 – 2 turns.

❷ If necessary, loosen the clamping element **13** by giving it a light blow with a suitable tool (e.g. a wooden wedge).

❸ Fold the lateral blade-shaft protector **16** down and push the carbide blade **15** sideward out of the blade drum **12** using a piece of wood.

Assembling the Planer Blade(s) (see figure B)

The guide groove of the planer blade always ensures continuous height adjustment when replacing or reversing it.

If required, clean the blade seat in the clamping element **13** and the planer blade **15**.

When assembling the planer blade, ensure that it is seated properly in the blade holder of the clamping element **13** and aligned flush at the side edge of the rear planer base plate **10**. Afterwards tighten the 2 fastening screws **14** again with the Allen key **17**.

Note: Before restarting, check if the fastening screws **14** are tightened well. Rotate the blade drum **12** by hand and ensure that the planer blade does not graze.

Dust/Chip Extraction

- Dusts from materials such as lead-containing coatings, some wood types, minerals and metal can be harmful to one's health. Touching or breathing-in the dusts can cause allergic reactions and/or lead to respiratory infections of the user or bystanders.
Certain dusts, such as oak or beech dust, are considered as carcinogenic, especially in connection with wood-treatment additives (chromate, wood preservative). Materials containing asbestos may only be worked by specialists.

- Use dust extraction whenever possible.
- Provide for good ventilation of the working place.
- It is recommended to wear a P2 filter-class respirator.

Observe the relevant regulations in your country for the materials to be worked.

Clean the chip ejector **2** regularly. Use a suitable tool (e.g., a piece of wood, compressed air, etc.) to clean a clogged chip ejector.

- **Do not reach into the saw dust ejector with your hands.** They could be injured by rotating parts.

To ensure optimum extraction of dust/chips, always work with external dust extraction or a chip/dust bag.

External Dust Extraction (see figure C)

An extraction hose (Ø 35 mm) **18** (accessory), can be attached on either side of the chip ejector.

Connect the vacuum hose **18** to a vacuum cleaner (accessory). An overview for connecting to various vacuum cleaners can be found at the end of this manual.

The vacuum cleaner must be suitable for the material being worked.

When vacuuming dry dust that is especially detrimental to health or carcinogenic, use a special vacuum cleaner.

Integrated Dust Extraction (see figure C)

A chip/dust bag (accessory) **19** can be used for smaller jobs. Insert the sleeve of the chip/dust bag firmly into the chip ejector **2**. Empty the chip/dust bag **19** at regulary intervals to maintain optimum dust collection.

Choice of Chip Ejector Side

With the selector lever **9**, the chip ejector **2** can be switched to right or left. Always press the selector lever **9** until it engages in the end position. The selected ejection direction is indicated by an arrow symbol on the selector lever **9**.

Operation

Operating Modes

Adjusting the Planing Depth

With the adjustment knob **1**, the planing depth can be adjusted variably from 0–4.0 mm using the planing depth scale **4** (scale graduation = 0.1 mm).

Park Rest (see figure G)

The park rest **28** allows the machine to be set down directly after operation, without danger of damaging the working surface or the planer blade. While planing, the park rest **28** is tilted upwards thus enabling full contact of the rear part of the planer base plate **10**.

Starting Operation

- **Observe correct mains voltage! The voltage of the power source must agree with the voltage specified on the nameplate of the machine. Power tools marked with 230 V can also be operated with 220 V.**

Switching On and Off

To **start** the machine, **first** push the lock-off button for the On/Off switch **5** and **then** press the On/Off switch **6** and keep it pressed.

To switch off the machine, **release** the On/Off switch **6**.

Note: For safety reasons, the On/Off switch **6** cannot be locked; it must remain pressed during the entire operation.

Constant Electronic Control

Constant electronic control holds the speed constant at no-load and under load, and ensures uniform working performance.

Soft Starting

The electronic soft-starting feature limits the torque when switching on and increases the working life of the motor and drive belt.

Temperature Dependent Overload Protection

In case of overload, the speed is reduced. Allow the machine to cool down by running it at maximum no-load speed for approx. 30 seconds.

Working Advice

Planing (see figure G)

Set the required planing depth and place the front part of the planer base plate **10** against the workpiece.

- ▶ **Apply the machine to the workpiece only when switched on.** Otherwise there is danger of kickback when the cutting tool jams in the workpiece.

Switch the machine on and guide the machine with even feed over the surface to be planed.

To achieve high-grade surfaces, work only with low feed and apply pressure on the centre of the planer base plate.

When machining hard materials (e.g. hardwood) as well as when utilising the maximum planer width, set only low planing depths and reduce planer feed, as required.

Excessive feed reduces the surface quality and can lead to rapid clogging of the chip ejector.

Only sharp blades achieve good cutting capacity and give the machine longer life.

The integrated park rest **28** also allows for continued planing at any given location on the workpiece after an interruption:

- With the park rest folded down, place the machine on the location of the workpiece where the planing is to be continued.
- Switch on the machine.
- Apply the supporting pressure onto the front part of the planer base plate and slowly push the machine forward (❶). This tilts the park rest upward (❷) so that the rear part of the planer base plate faces on the workpiece again.
- Guide the machine over the surface to be planed (❸) with even feed.

Beveling Edges (see figure H)

The V-grooves in the front planer base plate allow quick and easy beveling of workpiece edges. Depending on required bevel width, use the corresponding V-groove. For this, place the planer with the V-groove onto the edge of the workpiece and guide it along the edge.

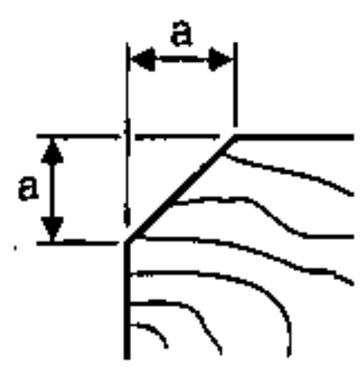

Groove to be used	Dimension a (mm)
none	0 – 5.7
small	1.9 – 7.6
medium	4.7 – 10.3
large	5.9 – 11.6

Planing with Parallel/Beveling Guide (see figures D – F)

Mount the parallel guide **20** or beveling guide **24** to the machine using the corresponding fastening bolt **23**. Depending on the application, mount the rebating depth stop **27** with fastening bolt **26** to the machine.

Loosen the locking nut **22** and adjust the requested rebating width on the scale **21**. Tighten the locking nut **22** again.

Adjust the requested rebating depth accordingly with the rebating depth stop **27**.

Carry out the planing procedure several times until the requested rebating depth is reached. Guide the planer applying sideward supporting pressure.

Beveling with the Beveling Guide

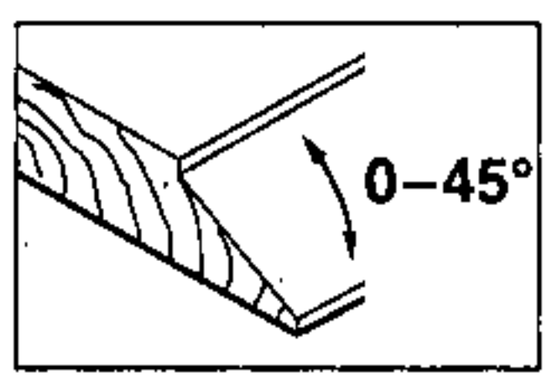

When beveling rebates and surfaces, adjust the required slope angle with the angle adjustment **25**.

Storage Compartment for Planer Blade/ Allen Key

A planer blade **15** and an Allen key **17** can be housed in the storage compartment **3** as shown in the figure. To remove the contents in the compartment, completely pull the storage compartment for the planer blade/Allen key **3** out of the planer.

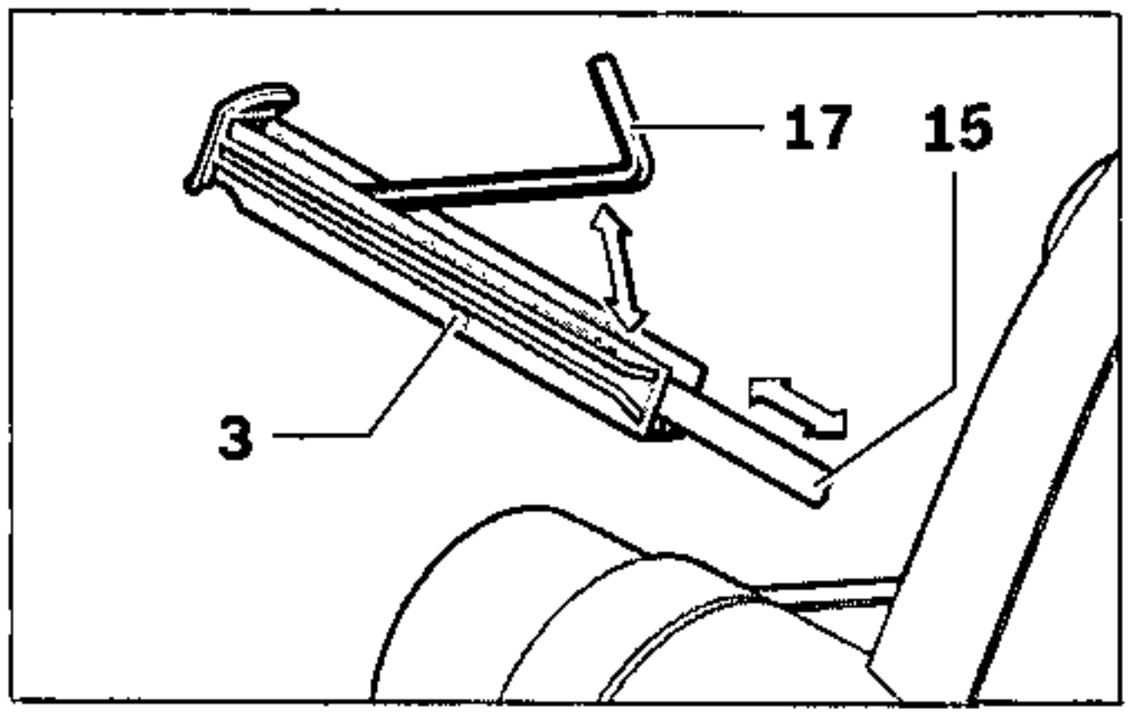

Service Station (see figure I)

The service station **29** in the carrying case can be used for holding the planer, e. g. for changing the blade.

- **Do not use the service station for stationary operation of the planer.**

Maintenance and Service

Maintenance and Cleaning

- **Before any work on the machine itself, pull the mains plug.**
- **For safe and proper working, always keep the machine and ventilation slots clean.**

Ensure easy operation of the park rest **28** and clean it regularly.

If the machine should fail despite the care taken in manufacturing and testing procedures, repair should be carried out by an after-sales service centre for Bosch power tools.

In all correspondence and spare parts order, please always include the 10-digit article number given on the type plate of the machine.

WARNING! Important instructions for connecting a new 3-pin plug to the 2-wire cable.

The wires in the cable are coloured according to the following code:

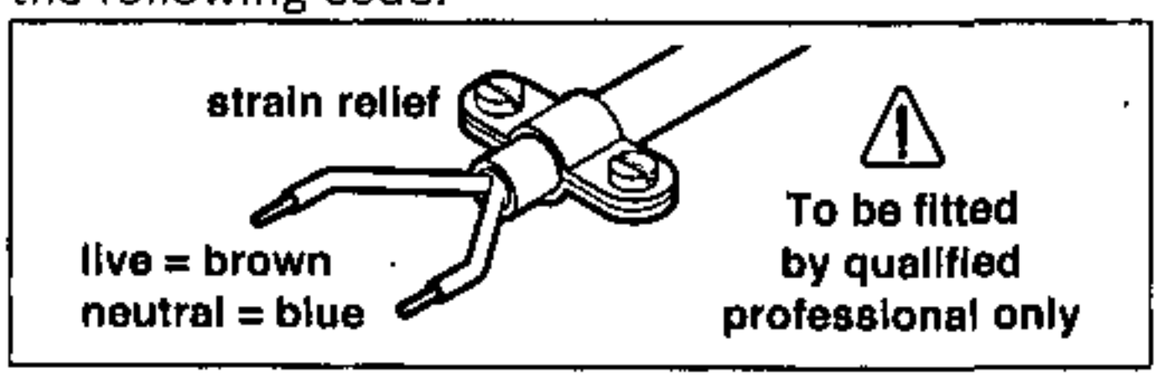

Do **not** connect the blue or brown wire to the earth terminal of the plug.

Important: If for any reason the moulded plug is removed from the cable of this power tool, it must be disposed of safely.

Replacing the Drive Belt (see figures K – L)

Unscrew screw **8** and take off the belt cover **7**. Remove the worn drive belt **30**.

Before assembling a new drive belt **30**, clean both pulleys **31** and **32**.

Place the new drive belt **30** on the small pulley **32** first and then work the drive belt **30** onto the large pulley **31** by hand while rotating it.

Reattach the belt cover **7** and tighten with the screw **8**.

After-sales Service and Customer Assistance

Our after-sales service responds to your questions concerning maintenance and repair of your product as well as spare parts. Exploded views and information on spare parts can also be found under:

www.bosch-pt.com

Our customer consultants answer your questions concerning best buy, application and adjustment of products and accessories.

Great Britain

Robert Bosch Ltd. (B.S.C.)
P.O. Box 98
Broadwater Park
North Orbital Road
Denham
Uxbridge
UB 9 5HJ
Tel. Service: +44 (0844) 736 0109
Fax: +44 (0844) 736 0146
E-Mail: SPT-Technical.de@de.bosch.com

Ireland

Origo Ltd.
Unit 23 Magna Drive
Magna Business Park
City West
Dublin 24
Tel. Service: +353 (01) 4 66 67 00
Fax: +353 (01) 4 66 68 88

Australia, New Zealand and Pacific Islands

Robert Bosch Australia Pty. Ltd.
Power Tools
Locked Bag 66
Clayton South VIC 3169
Customer Contact Center
Inside Australia:
Phone: +61 (01300) 307 044
Fax: +61 (01300) 307 045
Inside New Zealand:
Phone: +64 (0800) 543 353
Fax: +64 (0800) 428 570
Outside AU and NZ:
Phone: +61 (03) 9541 5555
www.bosch.com.au

Disposal

The machine, accessories and packaging should be sorted for environmental-friendly recycling.

Only for EC countries:

Do not dispose of power tools into household waste!
According the European Guideline 2002/96/EC for Waste Electrical and Electronic Equipment and its implementation into national right, power tools that are no longer usable must be collected separately and disposed of in an environmentally correct manner.

Subject to change without notice.

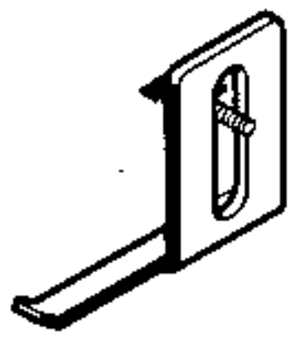

1 608 132 006

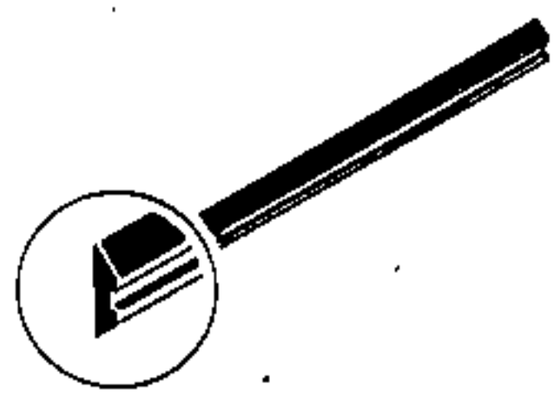

1x:
2 608 635 376

2x:
2 608 635 350

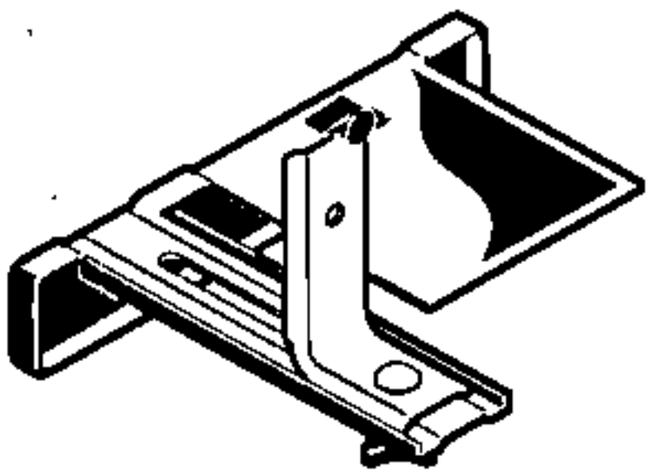

2 607 000 102

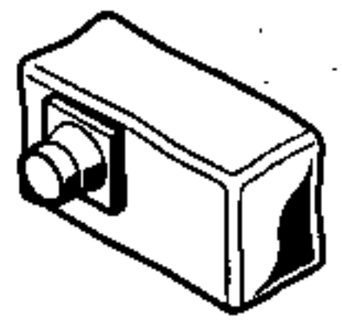

2 605 411 035

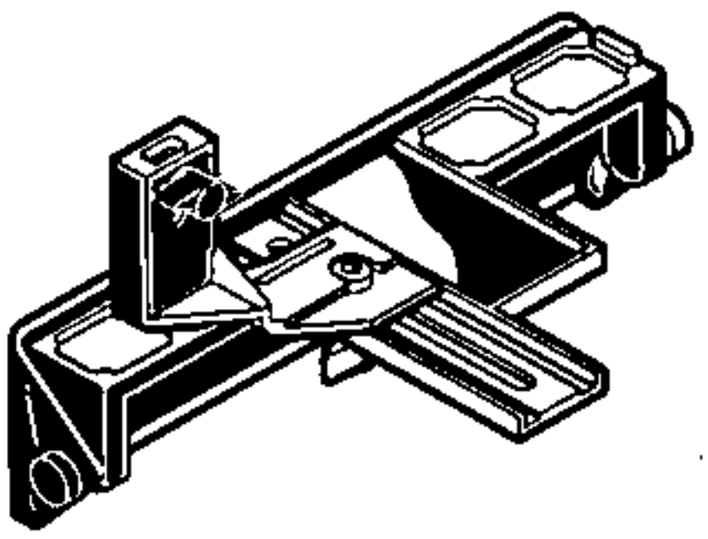

2 607 001 077
(45°)

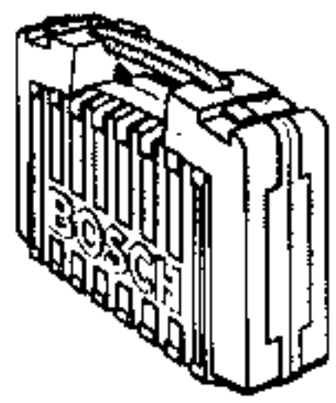

2 605 438 567

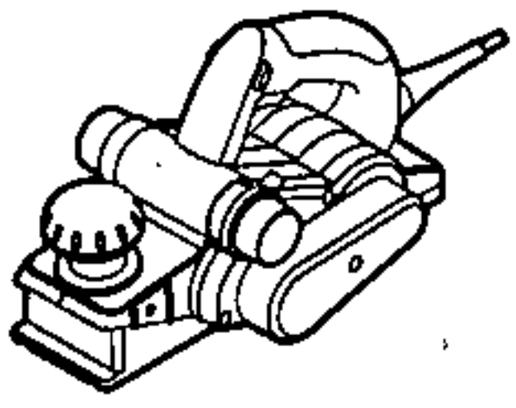

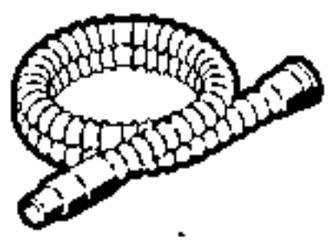

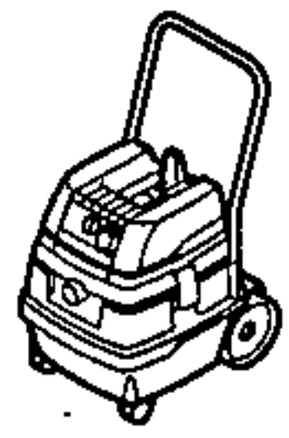

Ø 35 mm
3 m 2 607 002 163
5 m 2 607 002 164

GAS 25
GAS 50
GAS 50 M

(DR 01.08)

Tasfiye

Elektrikli el aleti, aksesuar ve ambalaj malzemesi çevre dostu bir yöntemle tasfiye edilmek üzere tekrar kazanım merkezine gönderilmelidir.

Sadece AB üyesi ülkeler için:

Elektrikli el aletini evsel çöplerin içine atmayın!
Elektrikli el aletleri ve eski elektronik aletlere ilişkin 2002/96/AT sayılı Avrupa Birliği yönetmeliği ve bunların tek tek ülkelerin hukuklarına uyarlanması uyarınca, kullanım ömrünü tamamlamış elektrikli el aletleri ayrı ayrı toplanmak ve çevre dostu bir yöntemle tasfiye edilmek üzere yeniden kazanım merkezlerine gönderilmek zorundadır.

Değişiklik haklarımız saklıdır.

377

Robert Bosch GmbH
Power Tools Division
70745 Leinfelden-Echterdingen

www.bosch-pt.com

1 609 929 N12 (2008.01) O / 111