66714
67738
83757

AURORA
INTERNATIONAL LIGHTING CORPORATION

IP65 SHOWERLIGHT
MR16 LOW VOLTAGE

PLEASE READ THESE INSTRUCTIONS CAREFULLY BEFORE INSTALLATION
LEAVE A COPY FOR THE USER / MAINTENANCE ENGINEER FOR FUTURE REFERENCE

IMPORTANT INSTALLATION INFORMATION

- Installation should be carried out in accordance with the latest edition of the I.E.E. Wiring Regulations (BS7671) and taking into consideration Part P of the Building Regulations. If in doubt, consult a qualified electrician.
- Maximum Voltage – 12V AC from an SELV source.
- Use only with MR16, GU5.3 lamp cap.
- Ensure that ALL electrical connections are tight with no loose strands.
- Ensure there is adequate free air circulation of at least 50mm around the luminaire. All luminaires run hot. It is the installer's responsibility to consider fire risk and take appropriate precautions.
- The luminaire must not, under any circumstances, be covered with any insulation materials and luminaries must not be installed close to flammable materials.
- Installations requiring Intumescent Fire Hoods – Please Note that if a non Aurora Intumescent Fire Hood is used with this luminaire the guarantee is invalid.
- These luminaires are for indoor or exterior soffit use.
- Before commencing installation or maintenance, ensure electricity is switched off at the mains.
- The nearest illuminated surface must be at least 0.5m from the front of the luminaire.
- (F) 35W- If this luminaire is to be mounted on a Normally Flammable Surface e.g. a wooden ceiling or a material based on wood, the maximum lamp rating is a 35-Watt lamp.
- (F) 50W- Do not use 50 Watt lamps in this luminaire if it is to be mounted on normally flammable surfaces.

IMPORTANT USER INFORMATION

- Always switch off mains supply before servicing, fitting or changing the lamp.
- Replace failed lamps immediately. Allow the lamp and fitting to cool before replacing lamp.
- Check that the correct lamp type and wattage is fitted. (MR16 Max. 35-Watts on flammable surfaces, 50-Watts on non-flammable surfaces).
- Fit self-shielding lamps only.
- Recommended Intumescent Fire Hood: Aurora AU-FH150.

INSTALLATION INSTRUCTIONS

1. If the fitting is installed on an uneven surface, the contact area between the fitting and the surface must be smoothed off. A suitable silicon sealant should be used between the gasket of the downlight housing and the mounting surface. Failure to do this may result in the IP65 rating not being maintained.
2. Select the required position for the luminaire ensuring the clearances shown in Fig.1 are observed. Beware of joists, water pipes and electric cables.
3. Connect the luminaire to the transformer using the terminal block supplied, insert cable protective sleeve provided around cable under the clamp of the terminal block. No earth connection is required. Ensure that the fitting does not come into contact with any earthed metal. Mains connection to the transformer should be made using a suitable electrical junction box in compliance with the I.E.E. Wiring Regulations. The "looping-in" of the fixed wiring supply should be maintained. See Fig. 4.
4. Insert the housing into the ceiling aperture, squeeze the fixing springs in towards the housing and push into the aperture (see Fig.2).
5. Fit the 12V lamp into the housing, secure in position with clip. Ensure that the lamp is correctly located in the lampholder.
6. Push the rim into the housing until it clicks into place (Fig 3). Ensure that the silicon gasket is properly seated between the housing and the front rim. Switch on mains power supply.

QR 56003, 56004, 56005

Fig. 1

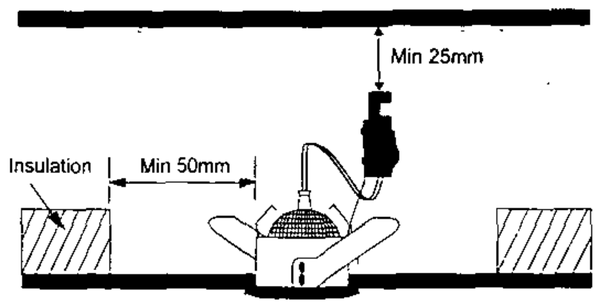

Fig.2

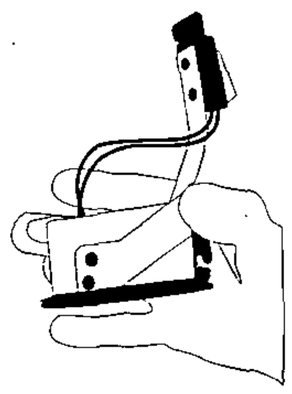

Fig.3

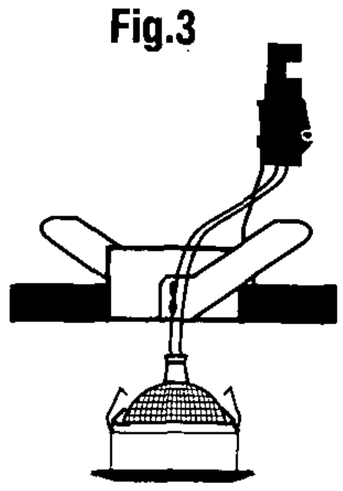

If your luminaire is not at the end of a wiring spur, then there will be an extra pair of wires together (looping-in wires) in the supply wiring which could be coloured black or red. These should be connected together using a fourth approved terminal block as shown. If in doubt consult a qualified electrician

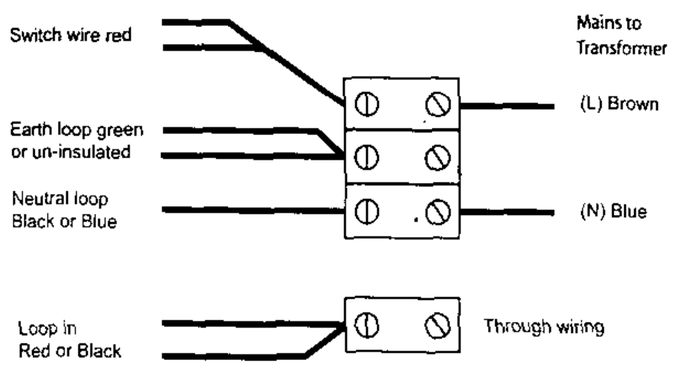

Fig.4

GENERAL

- Aurora low voltage luminaires (class III) should be used with a double insulated, safety extra low voltage (SELV) isolating transformer only.
- Class III luminaires MUST NOT be connected to a mains supply.
- The transformer should be located in a well-ventilated position, not closer than 20cm from the luminaire to avoid overheating.
- Connect the luminaire to the transformer using the terminal block and support bracket supplied.
- Dimming of 12V luminaires is possible. First check the compatibility between transformer and dimmer. Aurora electronic and toroidal transformers are dimmable. A slight increase in transformer noise may be evident when dimming.
- Ensure that the correct rating of transformer is used for the total lamp wattage. Electronic transformers require a minimum load to operate. E.g. a 20-60VA transformer requires a minimum load of 20W.
- This fitting is IP65 rated and is protected against dust and jets of water. It is suitable for installation inlocations containing a bath or shower, as defined by the I.E.E Wiring Regulations, Zones 1, 2 & 3 where water jets are likely. See Fig.3 below.

GUARANTEE

This product is guaranteed in the UK for a period of 1 year from the date of purchase. The guarantee is invalid in the case of improper use, installation, tampering, removal of the Q.C. date label, installation in an improper working environment or installation not according to the current edition of the I.E.E. Wiring Regulations (BS7671). With installations requiring Intumescent Fire Hoods the guarantee is invalid if the recommended Aurora Intumescent Fire Hood is not used with this luminaire. Should this product fail during the guarantee period it will be replaced free of charge, subject to correct installation and return of the faulty unit. Aurora does not accept responsibility for any installation costs associated with the replacement of this product. Your statutory rights are not affected. Aurora reserves the right to alter specifications without prior notice.

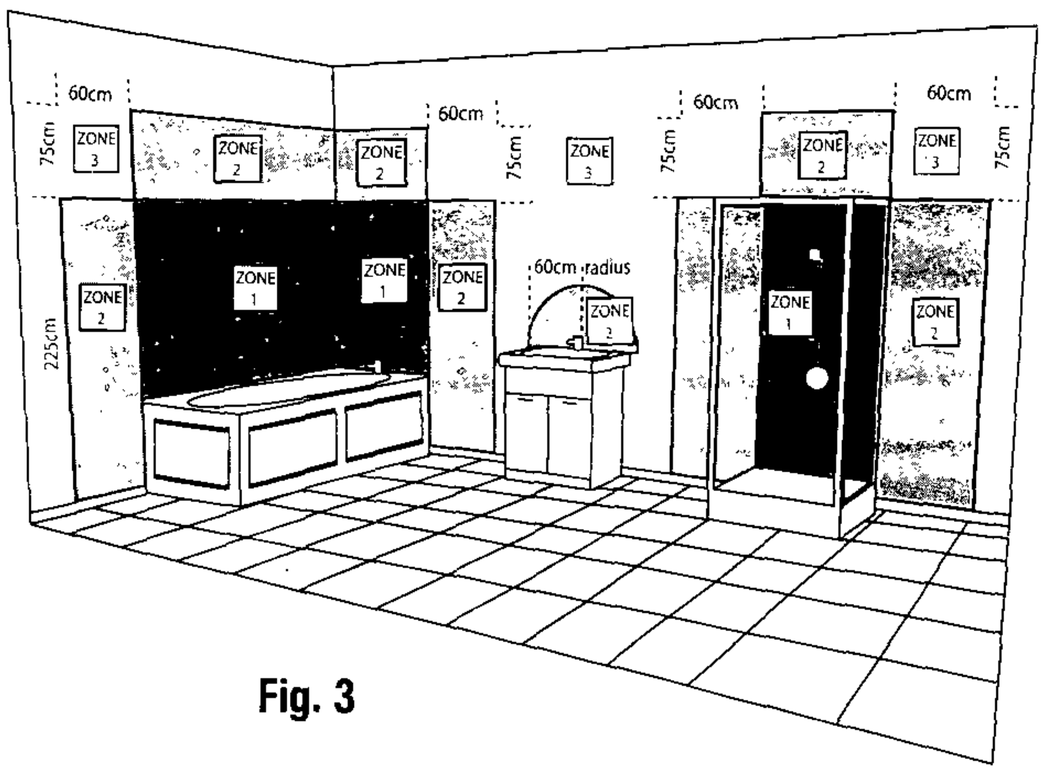

Fig. 3

Aurora Limited 16 Alban Park Hatfield Road St Albans Hertfordshire AL4 0JJ United Kingdom
Website: www.aurora.eu.com
Document version - AU-MR16_IP65_V1_05.doc