Installation Instructions

ATC Cylinder Thermostat

SPECIFICATION

Temperature Range	:	30 - 90°C
Construction	:	BS/EN 60730
Max. ambient temp.	:	45°C
IP Rating	:	IP40
Switch Rating	:	6(2.5)A
Switch Type	:	SPDT (type 1B)
Switching Differential	:	6-10
Switch Configuration	:	1-3 Make on temp. rise 1-2 Break on temp. rise
Voltage Rating	:	220/240 VAC, 50/60 Hz

This product complies with the following EC Directives:
Electro-Magnetic Compatibility Directive.
(EMC) (89\336\EEC), (92\31\EEC)
Low Voltage Directive.
(LVD) (73\23\EEC), (93\68\EEC)
Pressure Directive (PD) 97\23\EC

CE

energy saving recommended

Certification Mark

PLACING OF THERMOSTAT

Position thermostat 1/3 up from base of cylinder.

Fit to cylinder using spring cord supplied.

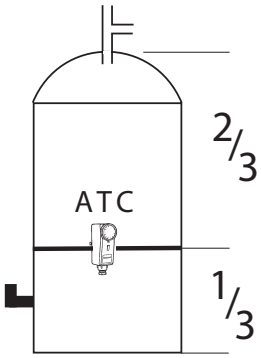

WIRING DETAIL

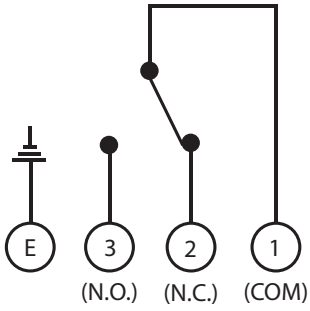

RECOMMENDED SETTING

55-60°C

11385 Crystal Mark

Clarity approved by Plain English Campaign

This text has been edited and approved by the Plain English Campaign, who has issued a Crystal Mark to be displayed with it.

TACMA THE ASSOCIATION OF CONTROLS MANUFACTURERS

What is a cylinder thermostat? ... an explanation for householders

A cylinder thermostat switches on and off the heat supply from the boiler to the hot-water cylinder. It works by sensing the temperature of the water inside the cylinder, switching on the water heating when the temperature falls below the thermostat setting, and switching it off once this set temperature has been reached.

Turning a cylinder thermostat to a higher setting will not make the water heat up any faster. How quickly the water heats up depends on the design of the heating system, for example, the size of boiler and the heat exchanger inside the cylinder.

The water heating will not work if a time switch or programmer has switched it off. And the cylinder thermostat will not always switch the boiler off, because the boiler sometimes needs to heat the radiators.

Cylinder thermostats are usually fitted between one quarter and one third of the way up the cylinder. The cylinder thermostat will have a temperature scale marked on it, and it should be set at between 60°C and 65°C, then left to do its job. This temperature is high enough to kill off harmful bacteria in the water, but raising the temperature of the stored hot water any higher will result in wasted energy and increase the risk of scalding.

If you have a boiler control thermostat, it should always be set to a higher temperature than that of the cylinder thermostat. In most boilers, a single boiler thermostat controls the temperature of water sent to both the cylinder and radiators, although in some there are two separate boiler thermostats.

Danfoss Randall can accept no responsibility for possible errors in catalogues, brochures and other printed material. Danfoss Randall reserves the right to alter its products without notice. This also applies to products already on order provided that such alterations can be made without subsequent changes being necessary in specifications already agreed.

Danfoss Randall Ltd
Ampthill Road
Bedford, MK42 9ER
Tel: (01234) 364621 Fax: (01234) 219705
Email: danfossrandall@danfoss.com
Website: www.danfoss-randall.co.uk

Part No. 9611v05 07/07